GF Piping Systems

PVC-C

Product Range International 2015

Piping systems for industrial application

List of abbreviations

ANSI	American National Standard
ASTM	American Society for Testing and Materials
BS	British Standard
DIN	Deutsche Industrie-Normen
ISO	International Standardization Organisation
ABS	Acrylnitril Butadien Styrene
PVC-U	Polyvinyl Chloride
PVC-C	Polyvinyl Chloride chlorinated
PP	Polypropylene, heat stabilised
PP-N	Polypropylene, Random copolymer unpigmented
PE	Polyethylene
PVDF	Polyvinylidene fluoride
EPDM	Ethylene Propylene Rubber
FPM	Fluorine Rubber, e.g. Viton®
NBR	Nitrile Rubber
IIR	Butyl Rubber
CSM	Chlore Sulphonyl Polythene, e.g. Hypalon®
CR	Chloroprene Rubber, e.g. Neoprene®
PROGEF	GF of PP
PTFE	Polytetrafluorethylene, e.g. Teflon®
UP-GF	Unsaturated polyester resin glassfibre reinforced
St	Steel
Ms	Brass
Tg	Malleable Iron
d	Pipe outside diameter
FM	Fusion Method
DN	Nominal bore
PN	Nominal pressure at 20°C, water
kg	Weight in kilograms
g	Weight in grams
SP	Standard pack. The figure given indicates the quantity of fittings contained in a standard pack
GP	Gross pack. The figure given indicates the quantityof fittings contained in a gross pack
G	Pipe thread, not pressure tight in the thread to ISO 228/1
NPT	Taper male thread pressure tight in the thread to ANSI B 1.20.1
R	Taper male thread, pressure tight in the thread to ISO 7/DIN 2999/1
Rc	Taper female thread, pressure tight in the thread to ISO 7/1
Rp	Parallel female thread, pressure tight in the thread to ISO 7/DIN 999/1
Tr	Trapezoid thread
SC	Size of hexagon bolts
s	A/F
e	Wall thickness
AL	Number of bolt holes
®	Registered trade-mark

Application area of pipes and fittings

General

The choice of material and the pressure rating of the pipe components are important for both operating safety and for attaining the specified minimum operational life of the system.

The decisive factors are:

- Operating pressur
- Operating temperatur
- Medium transported
- Duration of service

Separate calculations are necessary if safety factors are different or the operational lifetime is modified.

The chemical resistance of the material used can be determined from of our special list for "Chemical resistance of thermoplastics and elastomers for piping systems".

Pressure/temperature diagram for PVC-C

The design factor recommended by GF is incorporated.

It can be used for water or media resembling water, in other words, media which have no derating factor regarding the chemical resistance.

Remark: Please take into account the pressure / temperature diagrams for valves and special fittings. Because of the construction and/or sealing material used, differences are possible when compared with pipes and fittings. This information can be found in the planning fundamentals of the relevant types of valves, respectively special fittings.

Under certain conditions working temperatures up to 90°C are possible for limited times. Please contact your local GF representative for advice on any applications lying outside of our standard guidelines.

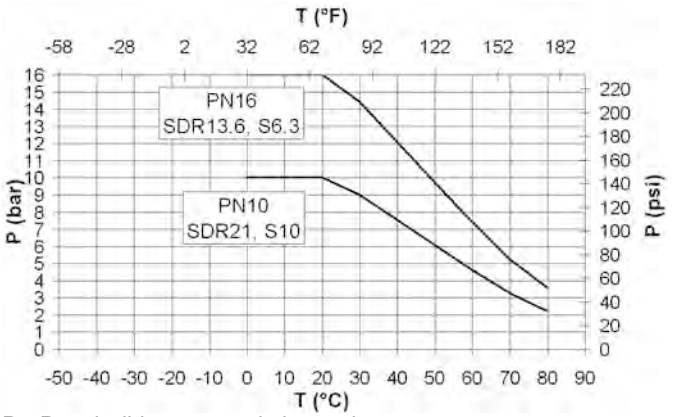

P Permissible pressure in bar, psi
T Temperature in °C, °F

PVC-C Standard Pipes, Fittings, Unions, Flanges and Flange Adaptors

	Page
Pipes	6
Fittings	7
Adaptor fittings	12
Unions	14
Flange adaptors	23
Backing flanges	24
Seals	27
Pipe clips metric	29
PVC-C accessories	33

Pipes

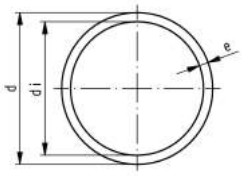

PF 2 80 449 001

Pipe PVC-C grey
Series S4 SDR9 nominal pressure PN16

Model:

- Material: PVC-C
- Colour: RAL 7038 - agate grey
- Dimension: DIN 8079, EN ISO 15493
- Pipe length: 5m, with plain ends
- Minimum order quantity: 1 length

d [mm]	PN [bar]	Code	Weight [kg/m]	di [mm]	e [mm]
16	16	**163 017 130**	0.136	12.4	1,8
20	16	**163 017 131**	0.217	15.4	2,3
25	16	**163 017 132**	0.326	19.4	2,8

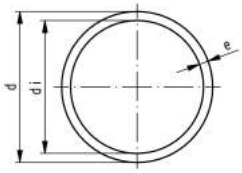

PF 2 80 449 001

Pipe PVC-C grey
Series S6.3 SDR13.6 nominal pressure PN16

Model:

- Material: PVC-C
- Colour: RAL 7038 - agate grey
- Dimension: DIN 8079, EN ISO 15493
- Pipe length: 5m, with plain ends
- Minimum order quantity: 1 length

d [mm]	PN [bar]	Code	Weight [kg/m]	e [mm]	di [mm]
32	16	**163 017 133**	0.379	2.4	27.2
40	16	**163 017 134**	0.589	3.0	34.0
50	16	**163 017 135**	0.896	3.7	42.6
63	16	**163 017 136**	1.420	4.7	53.6
75	16	**163 017 137**	2.010	5.6	63.0
90	16	**163 017 138**	2.880	6.7	76.6
110	16	**163 017 139**	4.270	8.2	93.8
160	16	**163 017 142**	8.970	11.9	136.4

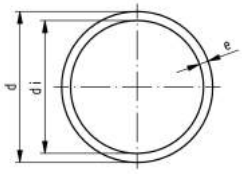

PF 2 80 449 003

Pipe PVC-C grey
Series S10 SDR21 nominal pressure PN10

Model:

- Material: PVC-C
- Colour: RAL 7038 - agate grey
- Dimension: DIN 8079, EN ISO 15493
- Pipe length: 5m, with plain ends
- Minimum order quantity: 1 length

d [mm]	PN [bar]	Code	Weight [kg/m]	e [mm]	di [mm]
75	10	**163 017 187**	1.320	3.6	67.8
90	10	**163 017 188**	1.930	4.3	81.4
110	10	**163 017 189**	2.890	5.3	99.4
160	10	**163 017 192**	6.060	7.7	124.6
225	10	**163 017 195**	11.900	10.8	203.4

Fittings

Bend 90° PVC-C metric

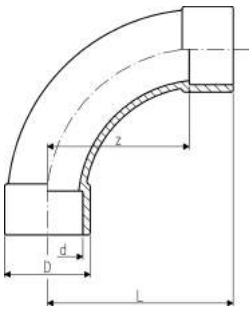

PF 2 32 450 009

- Radius = 2 d

d [mm]	PN [bar]	Code	SP	Weight [kg]	z [mm]	D [mm]	L [mm]
20	16	**723 000 106**	10	0.032	40	27	58
25	16	**723 000 107**	10	0.055	50	35	71
32	16	**723 000 108**	10	0.080	64	38	88
40	16	**723 000 109**	30	0.143	80	54	109
50	16	**723 000 110**	5	0.327	100	61	131
63	16	**723 000 111**	17	0.547	126	76	163
75	16	**723 000 112**	5	0.847	150	90	194
90	16	**723 000 113**	5	1.470	180	113	231
110	16	**723 000 114**	5	2.943	220	137	284
160	16	**723 000 117**	1	5.247	320	192	406

Bend 90° short pattern PVC-C metric

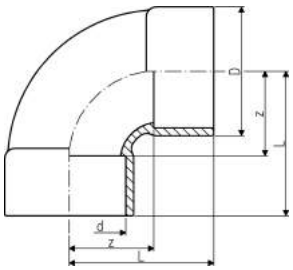

PF 2 32 450 009

- Radius = 0,75 d

d [mm]	PN [bar]	Code	SP	Weight [kg]	z [mm]	D [mm]	L [mm]
225	10	**723 010 120**	1	7.930	168	256	287

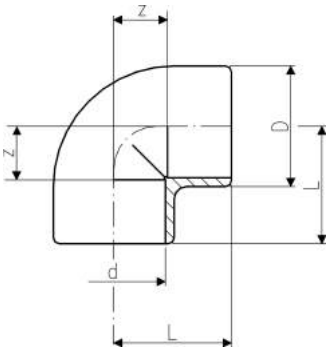

PF 2 32 450 001

Elbow 90° PVC-C metric

d [mm]	PN [bar]	Code	SP	Weight [kg]	z [mm]	D [mm]	L [mm]
16	16	**723 100 105**	10	0.015	9	21	23
20	16	**723 100 106**	10	0.014	11	25	27
25	16	**723 100 107**	10	0.025	14	31	33
32	16	**723 100 108**	10	0.047	17	40	39
40	16	**723 100 109**	10	0.077	21	49	47
50	16	**723 100 110**	10	0.139	26	61	57
63	16	**723 100 111**	10	0.259	33	76	72
75	16	**723 100 112**	5	0.437	40	90	84
90	16	**723 100 113**	5	0.626	46	110	97
110	16	**723 100 114**	4	1.085	61	128	116
160	16	**723 100 117**	1	3.097	80	185	166

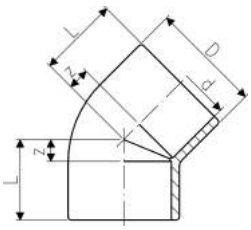

PF 2 32 450 002

Elbow 45° PVC-C metric

d [mm]	PN [bar]	Code	SP	Weight [kg]	z [mm]	D [mm]	L [mm]
16	16	**723 150 105**	10	0.008	5	21	19
20	16	**723 150 106**	10	0.011	5	25	21
25	16	**723 150 107**	10	0.021	6	31	25
32	16	**723 150 108**	10	0.037	8	40	30
40	16	**723 150 109**	5	0.063	10	49	36
50	16	**723 150 110**	5	0.110	12	61	43
63	16	**723 150 111**	10	0.205	14	76	52
75	16	**723 150 112**	5	0.323	17	88	61
90	16	**723 150 113**	5	0.526	20	106	71
110	16	**723 150 114**	10	0.782	28	137	89
160	16	**723 150 117**	1	2.384	36	185	122
225	10	**723 150 120**	1	4.833	49	250	168

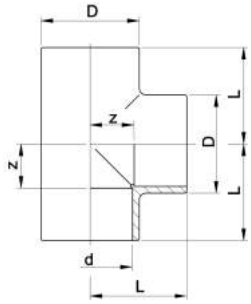

PF 2 32 450 003

Tee 90° PVC-C metric

d [mm]	PN [bar]	Code	SP	Weight [kg]	z [mm]	D [mm]	L [mm]
16	16	**723 200 105**	10	0.014	9	21	23
20	16	**723 200 106**	10	0.020	11	25	27
25	16	**723 200 107**	10	0.035	14	31	33
32	16	**723 200 108**	10	0.061	17	40	39
40	16	**723 200 109**	10	0.111	21	49	47
50	16	**723 200 110**	10	0.198	26	61	57
63	16	**723 200 111**	10	0.365	34	76	72
75	16	**723 200 112**	5	0.581	40	90	84
90	16	**723 200 113**	5	0.945	47	107	98
110	16	**723 200 114**	6	1.450	55	128	116
160	16	**723 200 117**	1	5.580	81	193	167
225	10	**723 200 120**	1	9.560	114	256	233

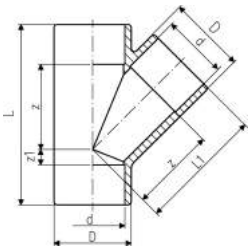

PF 2 32 450 026

Tee 45° PVC-C metric

d [mm]	PN [bar]	Code	SP	Weight [kg]	z [mm]	z1 [mm]	D [mm]	L [mm]	L1 [mm]
20	10	**723 250 106**	10	0.039	30	6	28	68	46
25	10	**723 250 107**	10	0.062	36	9	33	83	55
32	10	**723 250 108**	10	0.102	45	10	41	99	67
40	10	**723 250 109**	10	0.172	56	10	50	118	82
50	10	**723 250 110**	10	0.289	66	12	60	140	97
63	10	**723 250 111**	10	0.449	85	14	74	175	123
75	6	**723 250 112**	5	0.857	101	18	91	207	145
90	6	**723 250 113**	1	1.334	122	20	107	245	173
110	6	**723 250 114**	3	2.677	149	27	134	298	210

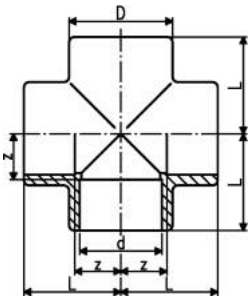

PF 2 32 450 036

Cross PVC-C metric

d [mm]	PN [bar]	Code	SP	Weight [kg]	z [mm]	D [mm]	L [mm]
32	16	**723 300 108**	10	0.101	17	43	39
63	16	**723 300 111**	5	0.511	34	79	72

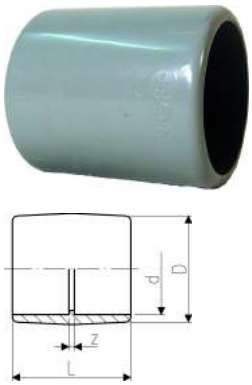

PF 2 32 450 004

Socket PVC-C metric

d [mm]	PN [bar]	Code	SP	Weight [kg]	z [mm]	D [mm]	L [mm]
16	16	**723 910 105**	10	0.008	3	22	31
20	16	**723 910 106**	10	0.010	3	26	35
25	16	**723 910 107**	10	0.017	3	31	41
32	16	**723 910 108**	10	0.029	3	39	47
40	16	**723 910 109**	10	0.049	3	49	55
50	16	**723 910 110**	10	0.085	3	61	65
63	16	**723 910 111**	10	0.155	3	76	79
75	16	**723 910 112**	10	0.204	4	87	92
90	16	**723 910 113**	10	0.338	5	110	107
110	16	**723 910 114**	5	0.765	5	131	132
160	16	**723 910 117**	2	1.605	8	183	180
225	10	**723 910 120**	1	3.644	10	253	248

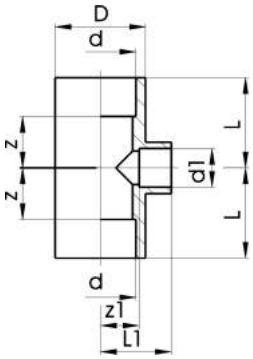

PF 2 32 450 010

Tee 90° reducing PVC-C metric

*Tee 90° delivered with the required reducing bushes

	d1 [mm]	d [mm]	PN [bar]	Code	SP	Weight [kg]	z1 [mm]	L1 [mm]	z [mm]	D [mm]	L [mm]
	20	25	16	**723 200 134**	10	0.042	14	30	14	33	33
	25	32	16	**723 200 138**	10	0.069	17	36	17	41	39
	25	40	16	**723 200 151**	10	0.120	23	42	23	50	49
	32	40	16	**723 200 147**	10	0.120	23	45	23	50	49
	20	50	16	**723 200 009**	5	0.196	28	44	28	62	59
	25	50	16	**723 200 010**	5	0.192	28	47	28	62	59
	32	50	16	**723 200 164**	10	0.199	28	50	28	62	59
	25	63	16	**723 200 011**	10	0.358	34	53	34	77	73
	32	63	16	**723 200 178**	5	0.368	34	56	35	77	73
	50	63	16	**723 200 170**	5	0.096	34	65	35	77	73
*	63	75	16	**723 200 184**	8	0.766	47	84	41	92	84
*	32	90	16	**723 200 142**	6	1.436	75	97	46	111	97
*	63	90	16	**723 200 145**	5	1.166	66	97	46	111	97
*	32	110	16	**723 200 135**	3	2.796	101	116	55	128	116
*	90	110	16	**723 200 137**	3	2.677	71	116	55	128	116

*

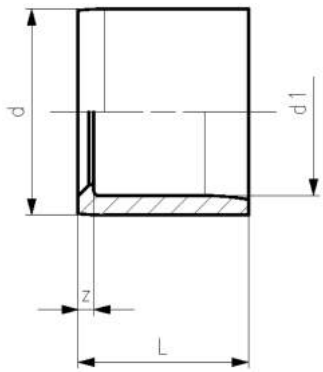

PF 2 32 450 017

Reducing bush short pattern PVC-C metric

Model:

- With solvent cement spigot and socket metric

	d [mm]	d1 [mm]	PN [bar]	Code	SP	Weight [kg]	z [mm]	L [mm]
*	20	16	16	**723 900 334**	10	0.004	2	16
*	25	20	16	**723 900 337**	10	0.004	3	19
*	32	20	16	**723 900 342**	10	0.015	6	22
*	32	25	16	**723 900 341**	10	0.009	4	22
	40	20	16	**723 900 348**	10	0.023	10	26
	40	25	16	**723 900 347**	10	0.024	7	26
*	40	32	16	**723 900 346**	10	0.017	4	26
	50	20	16	**723 900 355**	10	0.036	15	31
	50	25	16	**723 900 354**	10	0.037	12	31
	50	32	16	**723 900 353**	10	0.050	9	31
*	50	40	16	**723 900 352**	10	0.032	5	31
	63	32	16	**723 900 360**	10	0.086	16	38
	63	40	16	**723 900 359**	10	0.074	12	38
*	63	50	16	**723 900 358**	10	0.061	6	38
	75	50	16	**723 900 365**	10	0.115	13	44
*	75	63	16	**723 900 364**	10	0.086	6	44
	90	50	16	**723 900 372**	10	0.196	20	51
	90	63	16	**723 900 371**	10	0.183	14	51
*	90	75	16	**723 900 370**	10	0.146	8	51
	110	63	16	**723 900 378**	5	0.329	24	61
*	110	90	16	**723 900 376**	5	0.283	10	61
	160	110	16	**723 900 390**	5	0.956	25	86
	225	160	16	**723 900 396**	2	2.380	33	119

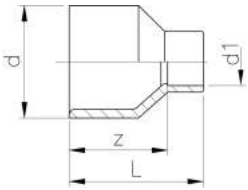

PF 2 32 450 035

Reducing bush long pattern PVC-C metric

Model:

- With solvent cement spigot and socket metric

d1 [mm]	d [mm]	PN [bar]	Code	SP	Weight [kg]	z [mm]	L [mm]
20	32	16	**723 910 342**	10	0.021	30	46
25	40	16	**723 910 347**	10	0.036	36	55
25	50	16	**723 910 354**	10	0.058	44	63
32	63	16	**723 910 360**	10	0.110	54	76
40	75	16	**723 910 366**	5	0.165	62	88
63	90	16	**723 910 371**	5	0.311	74	112

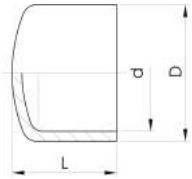

PF 2 32 450 005

Cap PVC-C metric

d [mm]	PN [bar]	Code	SP	Weight [kg]	D [mm]	L [mm]
16	16	**723 960 105**	10	0.008	26	24
20	16	**723 960 106**	10	0.011	30	25
25	16	**723 960 107**	10	0.018	37	30
32	16	**723 960 108**	10	0.029	44	34
40	16	**723 960 109**	10	0.046	55	41
50	16	**723 960 110**	10	0.064	64	44
63	16	**723 960 111**	5	0.120	80	54
75	16	**723 960 112**	5	0.162	87	65
90	16	**723 960 113**	10	0.315	112	77
110	16	**723 960 114**	5	0.692	145	101
160	10	**723 960 117**	2	1.599	188	130

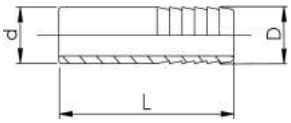

PF 2 32 450 024

Hose nozzle PVC-C metric

Model:

- With solvent cement spigot and parallel hose connection

d [mm]	PN [bar]	Code	SP	Weight [kg]	D [mm]	L [mm]
16	16	**723 960 405**	10	0.009	16	57
20	16	**723 960 406**	10	0.016	20	73
25	16	**723 960 407**	10	0.023	25	79
32	16	**723 960 408**	10	0.038	30	89

Adaptor fittings

Elbow 90° PVC-C metric Rp

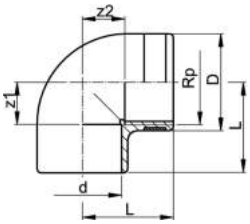

PF 2 32 450 011

Model:

- With solvent cement socket metric and parallel female thread Rp
- Reinforcing ring stainless (A2)
- Connection to plastic or metal threads
- Install with low mechanical stress and avoid large cyclic temperature changes
- Do not use thread sealing pastes that are harmful to PVC-C

Rp [inch]	d [mm]	PN [bar]	Code	SP	Weight [kg]	z1 [mm]	z2 [mm]	D [mm]	L [mm]
½	20	16	**723 100 206**	10	0.024	11	14	30	27
¾	25	16	**723 100 207**	10	0.037	14	17	35	33
1	32	16	**723 100 208**	40	0.063	17	22	45	39
1 ¼	40	16	**723 100 209**	100	0.134	23	27	55	50
1 ½	50	16	**723 100 210**	5	0.199	27	36	62	58
2	63	16	**723 100 211**	10	0.337	33	46	75	73

Socket PVC-C metric Rp

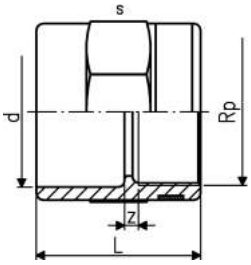

PF 2 32 450 012

Model:

- With solvent cement socket metric and parallel female thread Rp
- Reinforcing ring stainless (A2)
- Connection to plastic or metal threads
- Install with low mechanical stress and avoid large cyclic temperature changes
- Do not use thread sealing pastes that are harmful to PVC-C

Rp [inch]	d [mm]	PN [bar]	Code	SP	Weight [kg]	z [mm]	L [mm]	s [mm]
½	20	16	**723 910 206**	10	0.027	4	35	32
¾	25	16	**723 910 207**	10	0.035	3	40	36
1	32	16	**723 910 208**	10	0.059	3	45	46
1 ¼	40	16	**723 910 209**	10	0.093	5	51	55
1 ½	50	16	**723 910 210**	10	0.133	7	59	65
2	63	16	**723 910 211**	5	0.211	7	69	80

Reducing bush PVC-C metric Rp

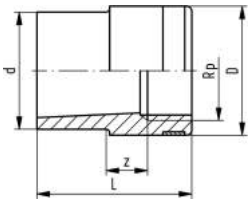

PF 2 32 450 022

Model:

- With solvent cement spigot metric and parallel female thread Rp
- Reinforcing ring stainless (A2)
- Connection to plastic or metal threads
- Install with low mechanical stress and avoid large cyclic temperature changes

d [mm]	Rp [inch]	PN [bar]	Code	SP	Weight [kg]	z [mm]	D [mm]	L [mm]
20	⅜	16	**723 910 434**	10	0.016	7	25	35
25	½	16	**723 910 437**	10	0.022	7	30	41
32	¾	16	**723 910 441**	10	0.033	15	35	48
40	1	16	**723 910 446**	10	0.061	20	45	56
50	1 ¼	16	**723 910 452**	10	0.101	20	55	66
63	1 ½	16	**723 910 458**	5	0.161	10	62	77

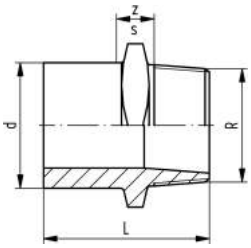

PF 2 32 450 018

Adaptor nipple PVC-C metric R

Model:

- With solvent cement spigot metric and taper male thread R
- Connection to plastic threads only
- Install with low mechanical stress and avoid large cyclic temperature changes
- Do not use thread sealing pastes that are harmful to PVC-C

R [inch]	d [mm]	PN [bar]	Code	SP	Weight [kg]	L [mm]	z [mm]	s [mm]
⅜	16	16	**723 910 505**	10	0.012	35	8	27

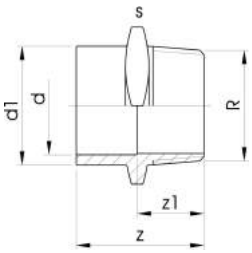

PF 2 32 450 023

Adaptor socket nipple PVC-C metric R

Model:

- With solvent cement spigot/socket metric and taper male thread R
- Connection to plastic threads only
- Install with low mechanical stress and avoid large cyclic temperature changes
- Do not use thread sealing pastes that are harmful to PVC-C

d [mm]	R [inch]	d1 [mm]	PN [bar]	Code	SP	Weight [kg]	z [mm]	z1 [mm]	s [mm]
16	½	20	16	**723 910 556**	10	0.017	42	28	32
20	¾	25	16	**723 910 557**	10	0.026	47	31	36
25	1	32	16	**723 910 558**	10	0.043	54	35	46
32	1 ¼	40	16	**723 910 559**	10	0.065	60	38	55
40	1 ½	50	16	**723 910 560**	10	0.102	66	40	65
50	2	63	16	**723 910 561**	5	0.173	78	47	80

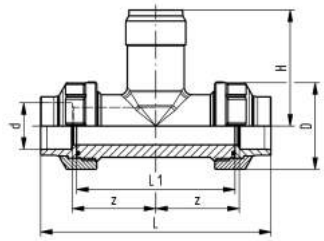

PF 2 98 930 004

Installation fitting type 310 PVC-C For socket systems metric

Range of use:

- Compatible Signet flow sensors: type 2551, 2537, 515, 8510, 2536, 8512
- Compatible Signet pH/ORP sensors: type 2724, 2725, 2726

Attention:

- sensor length depends on installation fitting

Model:

- Threaded outlet 1 ¼" NPSM
- Body and union nut PVDF
- Union end with solvent cement socket PVC-C

d [mm]	DN [mm]	PN [bar]	EPDM Code	SP	Weight [kg]	FPM Code	SP	Weight [kg]
20	15	16	**723 310 006**	1	0.250	**723 310 036**	1	0.250
25	20	16	**723 310 007**	1	0.355	**723 310 037**	1	0.355
32	25	16	**723 310 008**	1	0.427	**723 310 038**	1	0.427
40	32	16	**723 310 009**	1	0.700	**723 310 039**	1	0.700
50	40	16	**723 310 010**	1	0.850	**723 310 040**	1	0.850
63	50	16	**723 310 011**	1	1.182	**723 310 041**	1	1.182

d [mm]	DN [mm]	L [mm]	z [mm]	L1 [mm]	D [mm]	H [mm]	Sensor Type
20	15	132	49	90	45	76	flow X0; pH XX
25	20	148	53	100	55	78	flow X0; pH XX
32	25	164	58	110	62	81	flow X0; pH XX
40	32	172	58	110	75	85	flow X0; pH XX
50	40	188	63	120	84	89	flow X0; pH XX
63	50	212	68	130	101	95	flow X0; pH XX

Unions

Solvent cement unions

Union for solvent cement jointing PVC-C metric

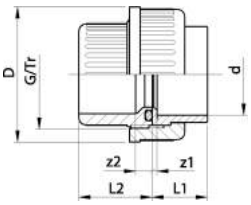

Model:

- Silicone free / paint-compatible
- Union End: solvent socket metric
- Union bush: Solvent cement socket metric
- With O-ring gasket

d [mm]	PN [bar]	EPDM Code	SP	Weight [kg]	FPM Code	SP	Weight [kg]
16	16	**723 510 155**	10	0.028	**723 510 180**	0	0.028
20	16	**723 510 156**	10	0.046	**723 510 181**	0	0.046
25	16	**723 510 157**	10	0.071	**723 510 182**	0	0.071
32	16	**723 510 158**	10	0.099	**723 510 183**	0	0.099
40	16	**723 510 159**	10	0.190	**723 510 184**	0	0.190
50	16	**723 510 160**	5	0.240	**723 510 185**	0	0.240
63	16	**723 510 161**	10	0.425	**723 510 186**	0	0.425
75	10	**723 510 162**	2	0.670	**723 510 187**	0	0.670
90	10	**723 510 163**	2	1.008	**723 510 188**	0	1.008
110	10	**723 510 164**	2	1.553	**723 510 189**	0	1.553

L2 [mm]	z1 [mm]	z2 [mm]	D [mm]	L1 [mm]	G/Tr [inch]
24	3	8	35	19	3/4
26	3	9	43	21	1
29	3	9	53	24	1 1/4
33	3	9	60	27	1 1/2
39	3	10	74	32	2
46	3	10	83	33	2 1/4
58	3	10	103	40	2 3/4
62	3	18	135	47	Tr108x5
69	5	18	158	56	Tr128x5
72	5	11	188	66	Tr154x6

PF 2 32 450 021

Union PVC-C metric

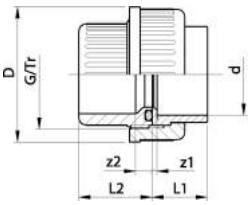

Model:

- Union End: Solvent cement socket metric
- Union bush: Solvent cement socket metric
- Jointing face: With O-ring groove
- Gasket: O-ring EPDM code no. 748 410 005-016, for d90 748 410 248

d [mm]	PN [bar]	EPDM Code	SP	Weight [kg]	FPM Code	SP	Weight [kg]
16	16	**723 510 105**	10	0.028	**723 510 130**	10	0.027
20	16	**723 510 106**	10	0.046	**723 510 131**	10	0.044
25	16	**723 510 107**	10	0.063	**723 510 132**	10	0.072
32	16	**723 510 108**	10	0.090	**723 510 133**	10	0.098
40	16	**723 510 109**	10	0.158	**723 510 134**	10	0.167
50	16	**723 510 110**	5	0.214	**723 510 135**	10	0.098
63	16	**723 510 111**	10	0.360	**723 510 136**	10	0.362
75	10	**723 510 112**	2	0.650	**723 510 137**	2	0.670
90	10	**723 510 313**	2	0.994	**723 510 338**	2	1.008
110	10	**723 510 114**	1	1.509	**723 510 139**	1	1.523

z1 [mm]	z2 [mm]	D [mm]	L1 [mm]	L2 [mm]	G/Tr [inch]
3	8	35	19	24	3/4
3	9	43	21	26	1
3	9	53	24	29	1 1/4
3	9	60	27	33	1 1/2
3	10	74	32	39	2
3	10	83	33	46	2 1/4
3	10	103	40	58	2 3/4
3	18	135	47	62	Tr108x5
5	18	158	56	69	Tr128x5
5	11	188	66	72	Tr154x6

PF 2 32 450 007

Adaptor unions

Adaptor union PVC-C metric Rp

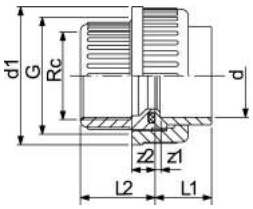

Model:

- Union End: Solvent cement socket metric
- Union Bush: Parallel female thread Rp
- Gasket: O-ring EPDM code no. 748 410 005-011
- Connection to plastic threads only
- Do not use thread sealing pastes that are harmful to PVC-C

Rp [inch]	d [mm]	PN [bar]	EPDM Code	SP	Weight [kg]	FPM Code	SP	Weight [kg]
⅜	16	16	**723 510 205**	10	0.022	**723 510 230**	0	0.022
½	20	16	**723 510 206**	10	0.047	**723 510 231**	0	0.040
¾	25	16	**723 510 207**	10	0.065	**723 510 232**	0	0.065
1	32	16	**723 510 208**	10	0.103	**723 510 233**	0	0.103
1 ¼	40	16	**723 510 209**	10	0.615	**723 510 234**	0	0.174
1 ½	50	16	**723 510 210**	2	0.239	**723 510 235**	0	0.239
2	63	16	**723 510 211**	2	0.400	**723 510 236**	0	0.435

z1 [mm]	z2 [mm]	D [mm]	L1 [mm]	L2 [mm]	G [inch]
3	13	35	17	24	3/4
3	13	43	19	26	1
3	14	51	22	29	1 1/4
3	15	58	25	32	1 1/2
3	19	74	31	38	2
3	26	83	34	45	2 1/4
3	33	100	41	56	2 3/4

PF 2 32 450 033

Adaptor union PVC-C metric/ASTM

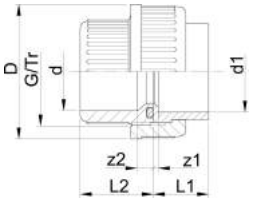

Model:

- Union bush: Solvent cement socket metric
- Union End: solvent cement socket inch ASTM
- Gasket: O-ring EPDM code no. 748 410 005-011

d [mm]	Inch [inch]	PN [bar]	EPDM Code	SP	Weight [kg]	FPM Code	SP	Weight [kg]
16	3/8	10	**723 514 105**	10	0.022	**723 514 130**	0	0.022
20	1/2	10	**723 514 106**	10	0.047	**723 514 131**	0	0.047
25	3/4	10	**723 514 107**	10	0.065	**723 514 132**	0	0.065
32	1	10	**723 514 108**	10	0.103	**723 514 133**	0	0.093
40	11/4	10	**723 514 109**	10	0.174	**723 514 134**	0	0.161
50	11/2	10	**723 514 110**	5	0.239	**723 514 135**	0	0.226
63	2	10	**723 514 111**	10	0.435	**723 514 136**	0	0.372

d [mm]	z1 [mm]	z2 [mm]	D [mm]	L1 [mm]	L2 [mm]	G [inch]
16	4	10	35	17	24	3/4
20	2	10	43	19	26	1
25	4	10	51	22	29	1 1/4
32	4	10	58	25	33	1 1/2
40	6	12	74	29	39	2
50	11	14	83	34	46	2 1/4
63	17	18	100	41	58	2 3/4

PF 2 32 450 034

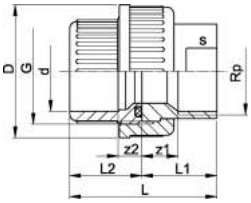

Adaptor union PVC-C/stainless steel metric Rp

Model:

- Union Nut: PVC-C
- Union Bush: Solvent cement socket PVC-C metric
- Union End: Stainless Steel WN 1.4404 (316L), parallel female thread Rp
- Gasket: O-ring EPDM code no. 748 410 005-011

d [mm]	Rp [inch]	PN [bar]	EPDM Code	SP	Weight [kg]	FPM Code	SP	Weight [kg]
16	⅜	16	**723 540 205**	10	0.053	**723 540 230**	0	0.053
20	½	16	**723 540 206**	10	0.096	**723 540 231**	0	0.096
25	¾	16	**723 540 207**	5	0.154	**723 540 232**	0	0.154
32	1	16	**723 540 208**	5	0.212	**723 540 233**	0	0.212
40	1 ¼	16	**723 540 209**	2	0.356	**723 540 234**	0	0.347
50	1 ½	16	**723 540 210**	2	0.455	**723 540 235**	0	0.502
63	2	16	**723 540 211**	2	0.721	**723 540 236**	0	0.721

z1 [mm]	z2 [mm]	D [mm]	L [mm]	L1 [mm]	L2 [mm]	G [inch]	s [mm]
9	10	35	43	19	24	3/4	19
11	10	43	50	24	26	1	24
11	10	51	55	26	29	1 1/4	29
12	10	58	61	29	33	1 1/2	36
14	12	74	71	33	39	2	45
15	14	83	79	34	46	2 1/4	54
15	18	100	95	39	58	2 3/4	63

PF 2 32 450 037

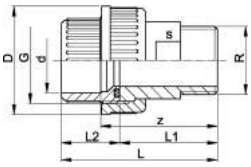

Adaptor union PVC-C/stainless steel metric R

Model:

- Union Nut: PVC-C
- Union Bush: Solvent cement socket PVC-C metric
- Union End: Stainless Steel WN 1.4404 (316L), taper male thread R
- Gasket: O-ring EPDM code no. 748 410 005-011

R [inch]	d [mm]	PN [bar]	EPDM Code	SP	Weight [kg]	FPM Code	SP	Weight [kg]
⅜	16	16	**723 540 705**	10	0.073	**723 540 730**	0	0.073
½	20	16	**723 540 706**	10	0.126	**723 540 731**	0	0.120
¾	25	16	**723 540 707**	5	0.174	**723 540 732**	0	0.174
1	32	16	**723 540 708**	5	0.262	**723 540 733**	0	0.259
1 ¼	40	16	**723 540 709**	2	0.476	**723 540 734**	0	0.482
1 ½	50	16	**723 540 710**	2	0.535	**723 540 735**	0	0.535
2	63	16	**723 540 711**	2	0.931	**723 540 736**	0	0.982

z [mm]	D [mm]	L [mm]	L1 [mm]	L2 [mm]	G [inch]	s [mm]
40	35	54	30	24	3/4	19
44	43	60	34	26	1	24
46	51	65	36	29	1 1/4	32
50	58	72	40	33	1 1/2	37
58	74	84	46	39	2	48
62	83	93	48	46	2 1/4	54
73	100	111	55	58	2 3/4	69

PF 2 32 450 037

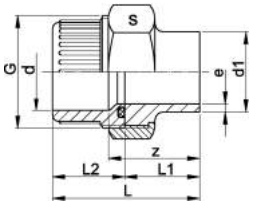

Adaptor union PVC-C/stainless steel metric welding end

Model:

- Union Nut: Stainless Steel WN 1.4404 (316L)
- Union Bush: Solvent cement socket PVC-C metric
- Union End: Stainless Steel 1.4404 (316L) with welding end
- Gasket: O-ring EPDM code no. 748 410 005-011

d1 [mm]	d [mm]	PN [bar]	EPDM Code	SP	Weight [kg]	FPM Code	SP	Weight [kg]
17	16	16	**723 545 505**	10	0.101	**723 545 530**	0	0.101
21	20	16	**723 545 506**	10	0.176	**723 545 531**	0	0.171
27	25	16	**723 545 507**	5	0.204	**723 545 532**	0	0.204
34	32	16	**723 545 508**	5	0.313	**723 545 533**	0	0.313
42	40	16	**723 545 509**	2	0.493	**723 545 534**	0	0.493
48	50	16	**723 545 510**	2	0.566	**723 545 535**	0	0.566
60	63	16	**723 545 511**	2	0.902	**723 545 536**	0	0.885

z [mm]	L [mm]	L1 [mm]	L2 [mm]	e [mm]	G [inch]	s [mm]
28	42	18	24	1.6	3/4	32
32	48	22	26	2.0	1	41
33	52	23	29	2.0	1 1/4	46
36	58	26	33	2.0	1 1/2	55
38	64	26	39	2.0	2	68
42	73	28	46	2.0	2 1/4	74
50	88	32	58	2.6	2 3/4	88

PF 2 32 450 037

Adaptor union PVC-C/malleable iron galvanised metric Rp

Model:

- Union Nut: PVC-C
- Union Bush: Solvent cement socket PVC-C metric
- Union End: malleable iron with parallel female thread Rp
- Gasket: O-ring EPDM code no. 748 410 006-011

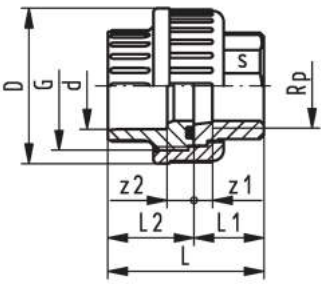

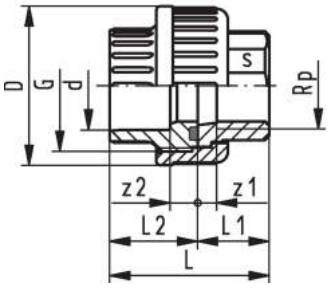

Rp [inch]	d [mm]	Code	SP	Weight [kg]	z2 [mm]	G [inch]	s [mm]	z1 [mm]	L [mm]	L2 [mm]	L1 [mm]	D [mm]
½	20	**723 530 306**	10	0.075	10	1	25	9	48	26	22	43
¾	25	**723 530 307**	5	0.112	10	1 1/4	31	7	51	29	22	51
1	32	**723 530 308**	5	0.157	10	1 1/2	38	9	58	33	26	58
1 ¼	40	**723 530 309**	2	0.300	12	2	48	12	69	39	31	72
1 ½	50	**723 530 310**	2	0.384	14	2 1/4	54	14	78	46	33	83
2	63	**723 530 311**	5	0.603	18	2 3/4	67	11	91	58	35	100

PF 2 32 450 019

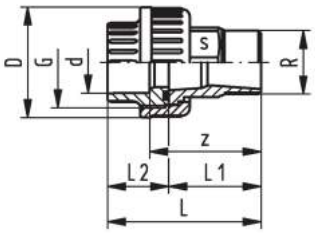

PF 2 32 450 020

Adaptor union PVC-C/malleable iron galvanised metric R

Model:

- Union Nut: PVC-C
- Union End: Malleable iron with taper male thread R
- Union Bush: Solvent cement socket PVC-C metric
- Gasket: O-ring EPDM code no. 748 410 006-011

R [inch]	d [mm]	Code	SP	Weight [kg]	s [mm]	L2 [mm]	G [inch]	z [mm]	L1 [mm]	D [mm]	L [mm]
½	20	**723 530 806**	10	0.114	25	26	1	50	40	43	66
¾	25	**723 530 807**	5	0.165	31	29	1 1/4	53	43	51	72
1	32	**723 530 808**	5	0.205	38	33	1 1/2	58	48	58	80
1 ¼	40	**723 530 809**	2	0.403	48	39	2	69	57	72	95
1 ½	50	**723 530 810**	2	0.539	54	46	2 1/4	73	59	83	104
2	63	**723 530 811**	8	0.787	67	58	2 3/4	80	62	100	118

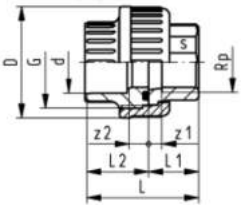

Adaptor union PVC-C/brass metric Rp

Model:

- Union Nut: PVC-C
- Union Bush: Solvent cement socket PVC-C metric
- Union End: Brass with parallel female thread Rp
- Gasket: O-ring EPDM code no. 748 410 006-011

Rp [inch]	PN [bar]	d [mm]	Code	SP	Weight [kg]	L1 [mm]	D [mm]	L [mm]	L2 [mm]	s [mm]	z1 [mm]	z2 [mm]	G [inch]
½	16	20	**723 550 506**	10	0.093	22	43	48	26	25	7	10	1
¾	16	25	**723 550 507**	5	0.152	25	51	54	29	30	9	10	1 1/4
1	16	32	**723 550 508**	5	0.198	27	58	60	33	36	8	11	1 1/2
1 ¼	16	40	**723 550 509**	2	0.351	31	72	70	39	46	10	13	2
1 ½	16	50	**723 550 510**	2	0.507	35	83	81	46	55	13	15	2 1/4
2	16	63	**723 550 511**	5	0.809	40	100	98	58	65	14	21	2 3/4

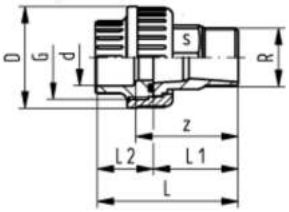

Adaptor union PVC-C/brass metric R

Model:

- Union Nut: PVC-C
- Union Bush: Solvent cement socket PVC-C metric
- Union End: Brass with taper male thread R
- Gasket: O-ring EPDM code no. 748 410 006-011

R [inch]	d [mm]	PN* [bar]	Code	SP	Weight [kg]	z [mm]	s [mm]	G [inch]	L1 [mm]	D [mm]	L [mm]	L2 [mm]
½	20	16	**723 550 906**	10	0.132	47	25	1	37	43	63	26
½	25	16	**723 550 957**	5	0.230	47	30	1 1/4	37	51	66	29
¾	25	16	**723 550 907**	5	0.203	52	30	1 1/4	42	51	71	29
1	25	16	**723 550 967**	5	0.312	56	30	1 1/4	46	51	75	29
½	32	16	**723 550 958**	5	0.302	48	36	1 1/2	37	58	70	33
¾	32	16	**723 550 968**	5	0.302	53	36	1 1/2	52	58	75	33
1	32	16	**723 550 908**	5	0.393	57	36	1 1/2	46	58	79	33
1 ¼	40	16	**723 550 909**	2	0.493	65	46	2	52	72	91	39
1 ½	50	16	**723 550 910**	2	1.468	71	55	2 1/4	56	83	102	46
2	63	16	**723 550 911**	8	1.103	87	65	2 3/4	67	100	125	58

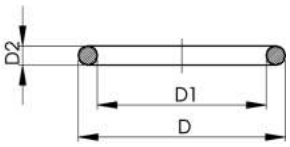

Spare parts unions
O-Ring gasket

Model:

- For unions and adaptor unions
- Hardness approx. 65° Shore
- EPDM minimum temperature -40°C
- FPM minimum temperature -15°C

DN [mm]	d [mm]	EPDM Code	PF	SP	Weight [kg]
8	10 - 12	**748 410 004**	2 30 162 006	100	0.002
10	16	**748 410 005**	2 30 162 006	0	0.001
15	20	**748 410 006**	2 30 162 006	0	0.001
20	25	**748 410 007**	2 31 800 999	0	0.004
25	32	**748 410 008**	2 30 162 006	0	0.002
32	40	**748 410 009**	2 30 162 006	0	0.001
40	50	**748 410 010**	2 30 162 006	0	0.001
50	63	**748 410 011**	2 30 162 006	0	0.010
65	75	**748 410 014**	2 31 800 999	500	0.001
80	90	**748 410 248**	2 30 162 006	1	0.008
100	110	**748 410 016**	2 31 800 999	100	0.016

FPM Code	PF	SP	Weight [kg]	D [mm]	closest inch [inch]	D1 [mm]	D2 [mm]
749 410 004	2 30 162 006	0	0.001	18	¼	12	3
749 410 005	2 30 162 006	0	0.001	21	⅜	16	3
749 410 006	2 30 162 006	0	0.001	27	½	20	4
749 410 007	2 31 800 999	100	0.002	35	¾	28	4
749 410 008	2 30 162 006	100	0.002	40	1	33	4
749 410 009	2 30 162 006	0	0.007	51	1 ¼	41	5
749 410 010	2 30 162 006	0	0.060	58	1 ½	47	5
749 410 011	2 30 162 006	100	0.003	70	2	60	5
749 410 014	2 31 800 999	100	0.012	93	2 ½	82	5
749 410 248	2 30 162 006	1	0.020	105	3	95	5
749 410 016	2 31 800 999	50	0.031	134	4	120	7

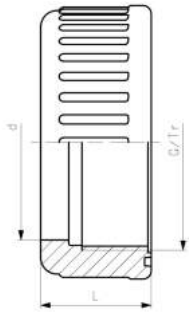

PF 2 32 450 999

Union nut PVC-C

Model:

- For union 723 510 105-114

d [mm]	PN [bar]	Code	SP	Weight [kg]	L [mm]	G/Tr [inch]
16	16	**723 690 005**	0	0.012	21	3/4
20	16	**723 690 006**	0	0.020	23	1
25	16	**723 690 007**	0	0.021	24	1 1/4
32	16	**723 690 008**	0	0.031	26	1 1/2
40	16	**723 690 009**	0	0.053	29	2
50	16	**723 690 010**	0	0.092	34	2 1/4
63	16	**723 690 011**	0	0.133	38	2 3/4
75	10	**723 690 012**	0	0.267	40	Tr108x5
90	10	**723 690 013**	0	0.389	43	Tr128x5
110	10	**723 690 014**	0	0.609	48	Tr154x6

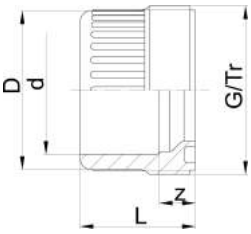

PF 2 32 450 999

Union bush PVC-C metric

Model:

- Solvent cement socket metric
- For union 723 510 105-114
- Jointing face: With O-Ring groove
- Gasket: O-ring EPDM code no. 748 410 005-016

d [mm]	PN [bar]	Code	SP	Weight [kg]	z [mm]	D [mm]	L [mm]	G/Tr [inch]
16	16	**723 840 105**	10	0.009	11	24	25	3/4
20	16	**723 840 106**	10	0.014	12	28	26	1
25	16	**723 840 107**	10	0.024	11	33	29	1 1/4
32	16	**723 840 108**	10	0.038	10	41	33	1 1/2
40	16	**723 840 109**	10	0.066	12	50	39	2
50	16	**723 840 110**	10	0.083	14	62	46	2 1/4
63	16	**723 840 111**	10	0.158	19	77	58	2 3/4
75	10	**723 840 112**	20	0.230	18	93	62	Tr108x5
90	10	**723 840 123**	12	0.381	18	110	69	Tr128x5
110	10	**723 840 114**	10	0.480	11	133	72	Tr154x6

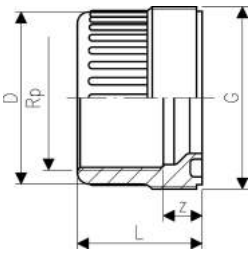

PF 2 32 450 027

Union bush PVC-C Rp

Model:

- With parallel female thread Rp
- For union 723 510 105-114
- Jointing face: With O-Ring groove
- Connection to plastic threads only
- Do not use thread sealing pastes that are harmful to PVC-C
- Gasket: O-ring EPDM code no. 748 410 005-011

Rp [inch]	PN [bar]	Code	SP	Weight [kg]	z [mm]	D [mm]	L [mm]	G [inch]
⅜	10	**723 840 605**	10	0.010	13	24	24	3/4
½	10	**723 840 606**	10	0.015	13	29	26	1
¾	10	**723 840 607**	10	0.024	14	34	29	1 1/4
1	10	**723 840 608**	10	0.039	15	42	32	1 1/2
1 ¼	10	**723 840 609**	10	0.069	19	53	38	2
1 ½	10	**723 840 610**	10	0.092	26	63	45	2 1/4
2	10	**723 840 611**	10	0.114	33	78	56	2 3/4

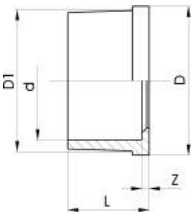

PF 2 32 450 999

Union end PVC-C metric

Model:

- For union 723 510 105-114
- With solvent cement socket metric

d [mm]	PN [bar]	Code	SP	Weight [kg]	z [mm]	D [mm]	D1 [mm]	L [mm]
16	16	**723 800 105**	10	0.005	3	24	22	19
20	16	**723 800 106**	10	0.010	4	30	28	21
25	16	**723 800 107**	10	0.018	3	39	36	24
32	16	**723 800 108**	10	0.023	3	44	41	27
40	16	**723 800 109**	10	0.062	3	57	53	31
50	16	**723 800 110**	10	0.064	3	63	59	34
63	16	**723 800 111**	10	0.120	3	78	74	41
75	10	**723 800 162**	20	0.157	3	101	91	47
90	10	**723 800 163**	12	0.260	5	121	108	56
110	10	**723 800 164**	10	0.418	5	146	131	66

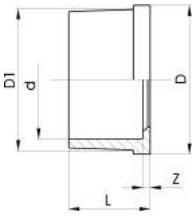

Union end PVC-C ASTM

Model:

- For union 723 510 105-114
- With solvent cement socket ASTM

Inch [inch]	PN [bar]	Code	PF	SP	Weight [kg]	z [mm]	D [mm]	D1 [mm]	L [mm]
3/8	16	**723 602 005**	2 32 450 032	0	0.006	3	24	22	22
1/2	16	**723 602 006**	2 32 450 032	0	0.013	3	30	28	25
3/4	16	**723 602 007**	2 32 450 032	0	0.017	3	39	36	28
1	16	**723 602 008**	2 32 450 032	0	0.024	3	45	42	32
11/4	16	**723 602 009**	2 32 450 032	0	0.038	3	57	53	35
11/2	16	**723 602 010**	2 32 450 032	0	0.048	3	63	59	38
2	16	**723 602 011**	2 32 450 032	0	0.080	3	78	74	41
2 1/2	16	**723 602 012**				3	101	91	47
3	16	**723 602 013**				5	121	108	56
4	16	**723 602 014**				5	146	131	66

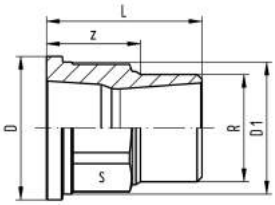

PF 2 30 153 999

Union end malleable iron galvanized R

Model:

- Union End: Malleable iron with taper male thread R

R [inch]	d [mm]	Code	SP	Weight [kg]	D [mm]	L [mm]	D1 [mm]	z [mm]	s [mm]
½	20	**724 600 806**	200	0.069	30	40	27	25	23
¾	25	**724 600 807**	120	0.115	39	43	36	27	30
1	32	**724 600 808**	0	0.161	44	48	41	29	36
1 ¼	40	**724 600 809**	0	0.294	56	57	52	36	48
1 ½	50	**724 600 810**	0	0.353	62	59	58	37	54
2	63	**724 600 811**	15	0.570	78	62	73	36	66
2 ½	75	**724 600 812**	0	0.980	100	75	92	45	85
3	90	**724 600 813**	0	1.217	121	80	110	47	95

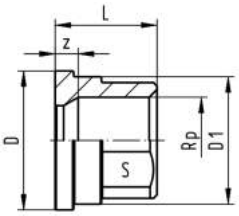

PF 2 30 153 999

Union end malleable iron galvanized Rp

Model:

- Union End: malleable iron with parallel female thread Rp

d [mm]	Rp [inch]	PN [bar]	Code	SP	Weight [kg]	D [mm]	L [mm]	s [mm]	z [mm]	D1 [mm]
20	½	16	**724 600 206**	100	0.037	30	22	25	9	27
25	¾	16	**724 600 207**	0	0.072	39	22	31	7	36
32	1	16	**724 600 208**	120	0.088	44	26	38	9	41
32	1 ¼	16	**724 600 209**	0	0.172	56	31	48	12	52
50	1 ½	16	**724 600 210**	1	0.210	62	33	54	14	58
63	2	16	**724 600 211**	0	0.331	78	35	67	11	73
75	2 ½	16	**724 600 212**	35	0.557	100	39	85	12	92
90	3	16	**724 600 213**	0	0.650	121	45	96	15	110

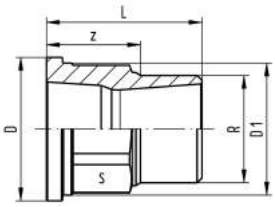

PF 2 30 153 999

Union end brass R

Model:

- Union End: Brass with taper male thread R

d [mm]	R [inch]	Code	SP	Weight [kg]	z [mm]	D1 [mm]	D [mm]	s [mm]	L [mm]
20	½	**720 600 246**	1	0.092	22	28	30	25	37
25	¾	**720 600 247**	1	0.151	25	36	39	30	42
25	½	**720 600 257**	1	0.142	27	36	39	30	42
32	1	**720 600 248**	1	0.216	28	42	45	36	46
32	½	**720 600 258**	1	0.113	31	42	45	36	46
32	¾	**720 600 268**	1	0.206	30	42	45	36	46
40	1 ¼	**720 600 249**	1	0.408	32	53	56	46	52
50	1 ½	**720 600 250**	1	0.538	36	59	62	55	56
63	2	**720 600 251**	1	0.859	42	74	78	65	67
75	2 ½	**720 600 252**	1	1.446	49	92	100	85	77
90	3	**720 600 253**	1	2.063	54	110	121	95	86

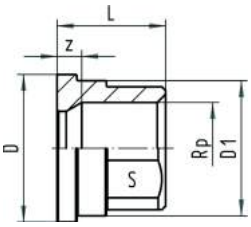

PF 2 30 153 999

Union end brass Rp

Model:

- Union End: Brass with parallel female thread Rp

Rp [inch]	d [mm]	Code	SP	Weight [kg]	L [mm]	s [mm]	D [mm]	D1 [mm]	z [mm]
½	20	**720 600 236**	1	0.059	22	25	30	28	5
¾	25	**720 600 237**	1	0.100	25	30	39	36	6
1	32	**720 600 238**	1	0.128	27	36	45	42	6
1 ¼	40	**720 600 239**	1	0.211	31	46	56	53	7
1 ½	50	**720 600 240**	1	0.324	35	55	62	59	7
2	63	**720 600 241**	1	0.510	40	65	78	74	8
2 ½	75	**720 600 242**	1	0.893	47	85	100	92	10
3	90	**720 600 243**	1	1.395	52	95	121	110	11

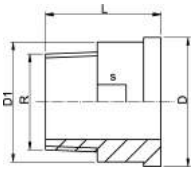

PF 2 30 153 999

Union end stainless steel R

Model:

- Material: Stainless Steel 1.4404 (316L)
- Taper male thread R

R [inch]	PN [bar]	Code	SP	Weight [kg]	D [mm]	D1 [mm]	L [mm]	s [mm]
⅜	16	**724 600 705**	10	0.052	24	22	30	19
½	16	**724 600 706**	10	0.083	30	28	34	24
¾	16	**724 600 707**	10	0.125	39	36	36	32
1	16	**724 600 708**	10	0.189	45	42	40	37
1 ¼	16	**724 600 709**	10	0.356	57	53	46	48
1 ½	16	**724 600 710**	10	0.407	63	59	48	54
2	16	**724 600 711**	10	0.668	78	74	55	69

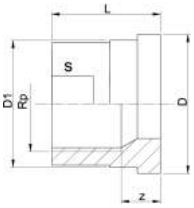

PF 2 30 153 999

Union end stainless steel Rp

Model:

- Material: Stainless Steel 1.4404 (316L)
- Parallel female thread Rp

Rp [inch]	PN [bar]	Code	SP	Weight [kg]	z [mm]	D [mm]	D1 [mm]	L [mm]	s [mm]
⅜	16	**724 600 655**	10	0.030	9	24	22	19	19
½	16	**724 600 656**	10	0.060	11	30	28	24	24
¾	16	**724 600 657**	10	0.092	11	39	36	26	29
1	16	**724 600 658**	10	0.137	12	45	42	29	36
1 ¼	16	**724 600 659**	10	0.226	14	57	53	33	45
1 ½	16	**724 600 660**	10	0.314	15	63	59	34	54
2	16	**724 600 661**	45	0.438	15	78	74	39	63

Flange adaptors

Flange adaptor PVC-C
Combined jointing face flat and serrated metric

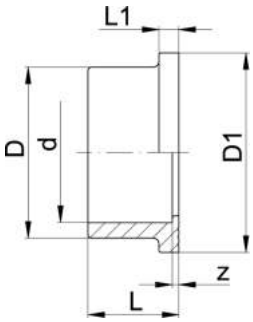

PF 2 32 450 006

Model:

- Gasket: flat gasket EPDM code no. 748 400 306-320
- Flange: code no. 727 700 406-420, 727 700 206-220, 721 700 006-020
- Gasket: profile flange gasket EPDM code no. 748 440 706-720, FPM code no. 749 440 706-720

Note:

* bevel on pipe may be needed if used with butterfly valve type 037/038/039

	d [mm]	DN [mm]	PN [bar]	Code	SP	Weight [kg]	z [mm]	D [mm]	D1 [mm]	L [mm]	L1 [mm]
	20	15	16	**723 790 106**	10	0.011	3	27	34	21	6
	25	20	16	**723 790 107**	10	0.018	3	33	41	24	7
	32	25	16	**723 790 108**	10	0.027	3	41	50	27	7
	40	32	16	**723 790 109**	10	0.032	3	50	61	30	8
	50	40	16	**723 790 110**	10	0.054	3	61	73	34	8
	63	50	16	**723 790 111**	10	0.097	3	76	90	41	9
	75	65	16	**723 790 112**	10	0.168	3	91	106	47	10
	90	80	16	**723 790 113**	10	0.265	5	108	125	56	11
	110	100	16	**723 790 114**	10	0.441	5	131	150	66	12
*	160	150	16	**723 790 117**	12	1.139	5	188	213	91	16
*	200	200	10	**723 790 119**	2	1.630	6	224	250	112	24
	225	200	10	**723 790 120**	2	1.860	6	248	274	125	25

Flange adaptor PVC-C with O-ring groove metric

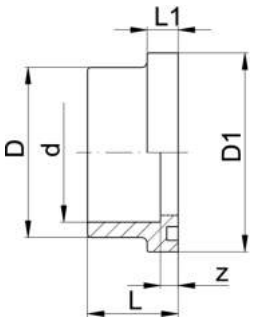

PF 2 32 450 030

Model:

- Counterpart: flange adaptor code no. 723 790 117, 723 790 120
- Gasket: O-ring EPDM code no. 748 410 019, 748 410 022; FPM code no. 749 410 019, 749 410 022
- Flange: code no. 727 700 406-420, 727 700 206-220, 721 700 006-020

d [mm]	PN [bar]	Code	SP	Weight [kg]	z [mm]	D [mm]	D1 [mm]	L [mm]	L1 [mm]
160	16	**723 810 117**	12	1.252	11	188	213	97	22
225	10	**723 810 120**	2	2.050	12	248	274	131	31

Backing flanges

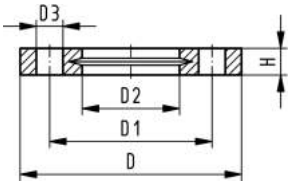

Backing flange PP-V
For socket systems metric

¹) Suitable for socket- and butt fusion systems (no pictograph on flange)
* Combined version, metric-ANSI
AL: number of holes

Model:

- UV-resistant. Applicable for outside applications
- With V-groove which applies force evenly on collar
- Connecting dimesnsion: ISO 7005, EN 1092, BS 4504, DIN 2501
- **Bolt circle PN 10**
- Modern full-plastic flange PP-GF (30 % glass-fibre reinforced)
- With integrated bolt retainers as an assembly aid

	d [mm]	DN [mm]	PN [bar]	Code	PF	SP	Weight [kg]
	20	15	16	**727 700 406**	2 34 238 030	56	0.093
	25	20	16	**727 700 407**	2 34 238 030	38	0.120
	32	25	16	**727 700 408**	2 34 238 030	80	0.151
	40	32	16	**727 700 409**	2 34 238 030	40	0.244
	50	40	16	**727 700 410**	2 34 238 030	30	0.297
	63	50	16	**727 700 411**	2 34 238 030	25	0.362
	75	65	16	**727 700 412**	2 34 238 030	19	0.487
	90	80	16	**727 700 413**	2 34 238 030	15	0.550
	110	100	16	**727 700 414**	2 34 238 030	13	0.640
	140	125	16	**727 700 416**	2 34 238 030	10	0.781
	160	150	16	**727 700 417**	2 34 238 032		
*	200	200	16	**727 700 419**	2 34 238 032		
*	225	200	16	**727 700 420**	2 34 238 032		
	250	250	16	**727 700 421**	2 34 238 030	0	2.229

	d [mm]	D [mm]	D1 [mm]	D2 [mm]	D3 [mm]	H [mm]	AL	SC
	20	95	65	28	14	16	4	M12
	25	105	75	34	14	17	4	M12
	32	115	85	42	14	18	4	M12
	40	140	100	51	18	20	4	M16
	50	150	110	62	18	22	4	M16
	63	165	125	78	18	24	4	M16
	75	185	145	92	18	26	4	M16
	90	200	160	110	18	27	8	M16
	110	220	180	133	18	28	8	M16
	140	250	210	167	18	30	8	M16
	160	285	241	190	22	32	8	M20
*	200	340	297	226	22	34	8	M20
*	225	340	297	250	22	34	8	M20
	250	395	350	277	22	38	12	M20

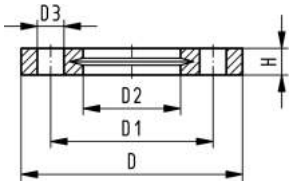

Backing flange PP-V
For socket systems Inch ANSI

AL: number of holes
* Combined version, metric-ANSI
• 727701414, 727700417, 727700419: only for use with original metric flange adaptors
[1]) Suitable for socket- and butt fusion systems (no pictograph on flange)

Model:

- UV-resistant. Applicable for outside applications
- Connecting dimension: ANSI/ASME B 16.5 class 150, ASTM D 4024, BS 1560, BS EN 1759
- **Bolt circle class 150**
- Modern full-plastic flange PP-GF (30 % glass-fibre reinforced)
- With V-groove which applies force evenly on collar
- With integrated bolt-fixing as an assembly aid

	Size [inch]	DN [mm]	d [mm]	PN [bar]	Code	SP	Weight [kg]
1	½	15	20	16	**727 701 406**	56	0.091
1	¾	20	25	16	**727 701 407**	38	0.120
1	1	25	32	16	**727 701 408**	80	0.147
1	1 ¼	32	40	16	**727 701 409**	40	0.246
1	1 ½	40	50	16	**727 701 410**	30	0.299
1	2	50	63	16	**727 701 411**	25	0.361
1	2 ½	65	75	16	**727 701 412**	19	0.492
	3	80	90	16	**727 701 413**	14	0.605
	4	100	110	16	**727 701 414**	12	0.704
	6	150	160	16	**727 700 417**		
*	8	200	200	16	**727 700 419**		
*	8	200	225	16	**727 700 420**		

	D [mm]	D1 [mm]	D2 [mm]	D3 [mm]	H [mm]	AL	SC
1	95	60	28	16	16	4	M12
1	105	70	34	16	17	4	M12
1	115	79	42	16	18	4	M12
1	140	89	51	16	20	4	M16
1	150	98	62	16	22	4	M16
1	165	121	78	19	24	4	M16
1	185	140	92	19	26	4	M16
	200	152	110	19	27	4	M16
	229	190	133	19	28	8	M16
	285	241	190	22	32	8	M20
*	340	297	226	22	34	8	M20
*	340	297	250	22	34	8	M20

PF 2 34 238 032

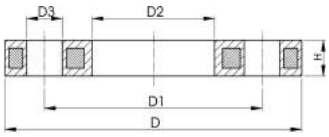

PF 2 34 238 021

Backing Flange PP-Steel for Socket Systems Inch/ANSI

- 727701214, 727700217: only for use with original metric flange adaptors

AL: number of holes

Model:

- For Flange Adaptors BS/ANSI
- Material: PP (30% glass-fibre reinforced) with steel ring
- UV-resistant. Applicable for outside applications
- Connecting dimension: ANSI/ASME B 16.5 class 150, ASTM D 4024, BS 1560, BS EN 1759
- **Bolt circle class 150**

d [inch]	d [mm]	Code	Weight [lb]	D1 [mm]	D2 [mm]	D3 [mm]	D [mm]	H [mm]	AL	SC
½	20	**727 701 206**	0.470	60	28	16	95	12	4	M12
¾	25	**727 701 207**	0.573	70	34	16	105	12	4	M12
1	32	**727 701 208**	0.917	79	42	16	115	16	4	M12
1 ¼	40	**727 701 209**	1.609	89	51	16	140	16	4	M16
1 ½	50	**727 701 210**	1.784	98	62	16	150	18	4	M16
2	63	**727 701 211**	1.909	121	78	19	165	18	4	M16
2 ½	75	**727 701 212**	2.463	140	92	19	185	18	4	M16
3	90	**727 701 213**	3.289	152	110	19	200	20	4	M16
4	110	**727 701 214**	3.737	190	133	19	229	20	8	M16
6	160	**727 700 217**		240	190	22	285	24	8	M20
8	225	**727 701 220**	9.861	298	250	22	340	27	8	M20

Seals

Flat gasket

Flat gasket

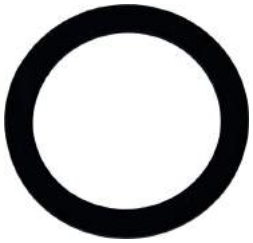

Model:

- For all metric GF Flange Adaptors
- Hardness approx. 65° Shore
- Integrated fixation aids from d110
- Centering on the inner diameter of the screw crown

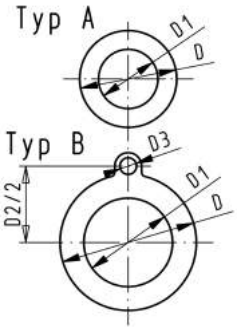

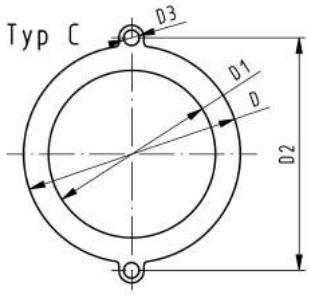

di FA are the suitable inner diameters of flanges adaptors

d [mm]	DN [mm]	PN [bar]	Type	EPDM Code	SP	Weight [kg]
16	10	10	A	**748 400 305**	0	0.004
20	15	10	A	**748 400 306**	0	0.012
25	20	10	A	**748 400 307**	0	0.004
32	25	10	A	**748 400 308**	0	0.008
40	32	10	A	**748 400 309**	0	0.013
50	40	10	A	**748 400 310**	0	0.016
63	50	10	A	**748 400 311**	0	0.018
75	65	10	A	**748 400 312**	0	0.029
90	80	10	A	**748 400 313**	0	0.035
110	100	10	B	**748 400 314**	0	0.051
125	100	10	B	**748 400 315**	0	0.044
140	125	10	B	**748 400 316**	0	0.068
160 - 180	150	10	B	**748 400 317**	0	0.090
200	200	6	C	**748 400 319**	0	0.210
225	200	6	C	**748 400 320**	0	0.140

d [mm]	DN [mm]	D [mm]	D1 [mm]	D2 [mm]	D3 [mm]	H [mm]	di FA [mm]
16	10	46	16			2	6 - 26
20	15	51	20			2	10 - 30
25	20	61	25			2	15 - 35
32	25	71	32			2	22 - 42
40	32	82	40			3	30 - 50
50	40	92	50			3	40 - 60
63	50	107	63			3	53 - 73
75	65	127	71			3	61 - 81
90	80	142	84			3	74 - 94
110	100	162	104	180	18	4	94 - 114
125	100	162	119	180	18	4	109 - 129
140	125	192	134	210	18	4	124 - 144
160 - 180	150	218	155	241	22	4	145 - 165
200	200	273	195	295	22	5	185 - 205
225	200	273	216	295	22	5	206 - 226

PF 2 30 162 003

Profiled gasket

Profile Flange Gasket, metric
EPDM / FPM

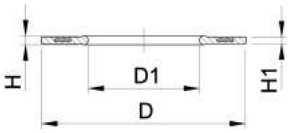

Model:

- For all metric GF Flange Adaptors
- Profile Gasket with steel insert (type G-ST-P/K)
- Hardness: 70° Shore EPDM, 75° Shore FPM
- EPDM: approved acc. to DVGW W 270, KTW recommendation
- Centering on the inner diameter of the screw crown
- material steel insert: carbon steel

di FA are the suitable inner diameters of flanges adaptors

d [mm]	PN [bar]	DN [mm]	EPDM Code	FPM Code	Weight [kg]	D [mm]	D1 [mm]	H [mm]	H1 [mm]	di FA [mm]
16	16	10	**748 440 705**	**749 440 705**	0.012	46	16	4	3	6 - 16
20	16	15	**748 440 706**	**749 440 706**	0.013	51	20	4	3	10 - 20
25	16	20	**748 440 707**	**749 440 707**	0.014	61	22	4	3	12 - 22
32	16	25	**748 440 708**	**749 440 708**	0.019	71	28	4	3	18 - 28
40	16	32	**748 440 709**	**749 440 709**	0.026	82	40	4	3	30 - 40
50	16	40	**748 440 710**	**749 440 710**	0.039	92	46	4	3	36 - 46
63	16	50	**748 440 711**	**749 440 711**	0.050	107	58	5	4	48 - 58
75	16	65	**748 440 712**	**749 440 712**	0.082	127	69	5	4	59 - 69
90	16	80	**748 440 713**	**749 440 713**	0.083	142	84	5	4	73 - 84
110	16	100	**748 440 714**	**749 440 714**	0.127	162	104	6	5	94 - 104
125	16	100	**748 440 715**	**749 440 715**	0.105	162	123	6	5	113 - 123
140	16	125	**748 440 716**	**749 440 716**	0.173	192	137	6	5	127 - 137
160 - 180	16	150	**748 440 717**	**749 440 717**	0.207	218	160	8	6	150 - 160
200	16	200	**748 440 719**	**749 440 719**	0.263	273	203	8	6	192 - 203
225	16	200	**748 440 720**	**749 440 720**	0.255	273	220	8	6	207 - 220

PF 2 30 162 037

O-Ring gasket

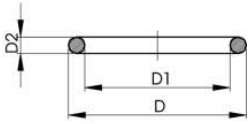

Model:

- For Flange Adaptors
- Hardness approx. 65° Shore

d [mm]	DN [mm]	EPDM Code	SP	Weight [kg]	FPM Code	SP	Weight [kg]
160	150	**748 410 019**	200	0.025	**749 410 019**	200	0.044
225	200	**748 410 022**	100	0.034	**749 410 022**	150	0.060

d [mm]	D [mm]	D1 [mm]	D2 [mm]	closest inch [inch]
160	191	177	6.99	6
225	255	241	6.99	8

PF 2 31 800 999

Pipe clips metric

KLIP-IT pipe clip type 061 PP metric

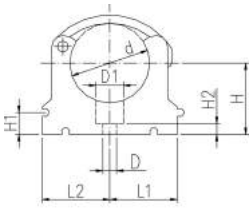

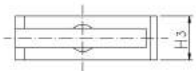

Model:

- Material: Clip and safety clip PP black, UV resistant, bolts galvanized
- d16 - d63: Height designed for Ball Valve Type 546 and 543
- **Minimum order quantity: standard packagings SP**

	d [inch]	d [mm]	Code	SP	Weight [kg]
*		10	**167 061 003**	10	0.003
*		12	**167 061 004**	10	0.003
*		16	**167 061 035**	1	0.007
		20	**167 061 036**	1	0.007
		25	**167 061 037**	10	0.009
*		32	**167 061 038**	10	0.012
		40	**167 061 039**	10	0.027
		50	**167 061 040**	10	0.031
		63	**167 061 041**	10	0.052
	2 ½	75	**167 061 012**	10	0.057
	3	90	**167 061 013**	10	0.092
	4	110	**167 061 014**	10	0.117
		125	**167 061 015**	10	0.180
	5	140	**167 061 016**	10	0.224
		160	**167 061 017**	10	0.242

	H1 [mm]	H3 [mm]	closest inch [inch]	D1 [mm]	HoH +/- 2mm [mm]	L1 [mm]	D [mm]	H [mm]	L2 [mm]	H2 [mm]	SC
*	10	12	⅛	8		11	5	20	14	6	M4
*	10	12	¼	8		11	5	21	14	6	M5
*	10	16	⅜	11	17	14	6	27	17	6	M5
	10	16	½	11	21	17	6	27	19	6	M5
	10	16	¾	11	27	19	6	30	22	6	M5
*	10	16	1	11	37	24	6	36	27	6	M5
	10	22	1 ¼	14	44	34	7	44	34	7	M6
	10	22	1 ½	14	52	37	7	51	37	7	M6
	10	25	2	17	67	45	9	64	45	10	M8
	10	25	2 ½	17		52	9	58	52	10	M8
	10	28	3	17		65	9	65	65	10	M8
	10	28	4	17		79	9	75	79	10	M8
	10	32		17		88	9	90	88	10	M8
	10	32	5	17		98	9	110	98	10	M8
	10	32	6	17		109	9	108	109	10	M8

PF 2 30 162 023

KLIP-IT spacer type 061 PP

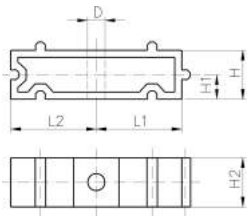

Model:

- For pipe clips Type 061/061H, PP black, UV resistant
- **Minimum order quantity: standard packaging SP**

Inch [inch]	d [mm]	Code	SP	Weight [kg]
⅛ - ¼	10 - 12	**167 061 153**	10	0.003
⅜	16	**167 061 155**	10	0.005
½	20	**167 061 156**	10	0.005
¾	25	**167 061 157**	10	0.007
1	32	**167 061 158**	10	0.006
1 ¼	40	**167 061 159**	10	0.015
1 ½	50	**167 061 160**	10	0.017
2	63	**167 061 161**	10	0.020
2 ½	75	**167 061 162**	10	0.027
3	90	**167 061 163**	10	0.039
4	110	**167 061 164**	10	0.048
4 ½	125	**167 061 165**	10	0.059
5	140	**167 061 166**	10	0.065
6	160	**167 061 167**	10	0.071

table comtinued next page

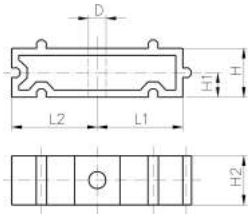

HoH +/- 2mm [mm]	D [mm]	L1 [mm]	L2 [mm]	H [mm]	H1 [mm]	H2 [mm]	SC
1.0	5	11	14	20	10	12	M4
17.0	6	14	17	20	10	16	M5
21.4	6	17	19	20	10	16	M5
26.9	6	19	22	20	10	16	M5
36.7	6	24	27	20	10	16	M5
44.4	7	34	34	20	10	22	M6
52.3	7	37	37	20	10	22	M6
66.7	9	45	45	20	10	25	M8
81.2	9	52	52	20	10	25	M8
100.0	9	65	65	20	10	28	M8
127.3	9	79	79	20	10	28	M8
142.9	9	88	88	20	10	32	M8
161.4	9	98	98	20	10	32	M8
185.1	9	109	109	20	10	32	M8

PF 2 30 162 023

KLIP-IT pipe clip type 061 PE metric

- Height not designed for ball valve 546 and 543. Please use spacer 73 06 11.

Model:

- Material: Clip PE and safety clip PP black, bolts galvanized
- **Minimum order quantity: standard packaging SP**

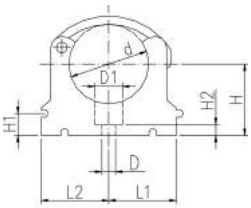

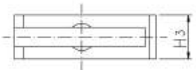

	d [mm]	Code	SP	Weight [kg]
*	10	**173 061 003**	10	0.003
*	12	**173 061 004**	10	0.006
*	16	**173 061 005**	10	0.006
*	20	**173 061 006**	10	0.007
*	25	**173 061 007**	10	0.009
*	32	**173 061 008**	10	0.011
	40	**173 061 009**	10	0.026
	50	**173 061 010**	10	0.028
	63	**173 061 011**	10	0.047
	75	**173 061 012**	10	0.061
	90	**173 061 013**	10	0.098
	110	**173 061 014**	10	0.125
	125	**173 061 015**	10	0.194
	140	**173 061 016**	10	0.243
	160	**173 061 017**	10	0.254

	HoH +/- 2mm [mm]	D1 [mm]	D [mm]	L1 [mm]	L2 [mm]	H [mm]	H1 [mm]	H2 [mm]	H3 [mm]	SC
*	1	8	5	11	14	20	10	6	12	M4
*	1	8	5	11	14	21	10	6	12	M5
*	17	11	6	14	17	23	10	6	16	M5
*	21	11	6	17	19	25	10	6	16	M5
*	27	11	6	19	22	28	10	6	16	M5
*	37	11	6	24	27	31	10	6	16	M5
	44	14	7	34	34	35	10	7	22	M6
	52	14	7	37	37	40	10	7	22	M6
	67	17	9	45	45	52	10	10	25	M8
	81	17	9	52	52	58	10	10	25	M8
	100	17	9	65	65	65	10	10	28	M8
	127	17	9	79	79	75	10	10	28	M8
	143	17	9	88	88	90	10	10	32	M8
	161	17	9	98	98	110	10	10	32	M8
	185	17	9	109	109	108	10	10	32	M8

PF 2 30 162 026

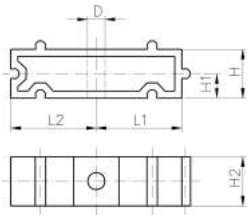

KLIP-IT spacer type 061 PE

Model:

- **Minimum order quantity: standard packaging SP**
- For pipe clips Type 061, PE black, UV resistant

d [mm]	Inch [inch]	Code	SP	Weight [kg]
	1/8-1/4	**173 061 153**	10	0.003
16	3/8	**173 061 155**	10	0.005
20	1/2	**173 061 156**	10	0.005
25	3/4	**173 061 157**	10	0.006
32	1	**173 061 158**	10	0.008
40	11/4	**173 061 159**	10	0.016
50	11/2	**173 061 160**	10	0.017
63	2	**173 061 161**	10	0.025
75	21/2	**173 061 162**	10	0.027
90	3	**173 061 163**	10	0.040
110	4	**173 061 164**	10	0.050
125	41/2	**173 061 165**	10	0.059
140	5	**173 061 166**	10	0.065
160	6	**173 061 167**	10	0.078

HoH +/- 2mm [mm]	D [mm]	L1 [mm]	L2 [mm]	H [mm]	H1 [mm]	H2 [mm]	SC
17	5	11	14	20	10	12	M4
21	6	14	17	20	10	16	M5
27	6	17	19	20	10	16	M5
37	6	19	22	20	10	16	M5
44	6	24	27	20	10	16	M5
52	7	34	34	20	10	22	M6
67	7	37	37	20	10	22	M6
81	9	45	45	20	10	25	M8
100	9	52	52	20	10	25	M8
127	9	65	65	20	10	28	M8
143	9	79	79	20	10	28	M8
	9	88	88	20	10	32	M8
185	9	98	98	20	10	32	M8
	9	109	109	20	10	32	M8

PF 2 30 162 026

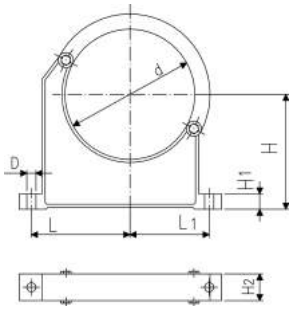

Pipe clip type 060 PP metric

Model:

- Material: Clip and safety clip PP black, UV resistant, bolts galvanized
- **Minimum order quantity: standard packaging SP or gross packaging GP**
- Accidental opening of the safety clip is not possible
- Clip and safety clip are not assembled in the packaging.
- Pipes with flanges can be installed directly

d [inch]	d [mm]	Code	SP	Weight [kg]	closest inch [inch]	D [mm]	L [mm]	L1 [mm]	H [mm]	H1 [mm]	H2 [mm]	SC
3	90	**167 060 038**	10	0.144	3	9	89	71	105	15	33	M 8
	110	**167 060 039**	10	0.158	4	9	94	80	115	15	33	M 8
	125	**167 060 040**	10	0.249		11	116	91	130	20	35	M10
5	140	**167 060 041**	10	0.260	5	11	121	98	130	20	35	M10
	160	**167 060 042**	10	0.296	6	11	131	107	148	20	35	M10
	180	**167 060 043**	10	0.327	7	11	143	115	163	20	35	M10
	200	**167 060 019**	5	0.539	8	13	152	120	175	25	39	M12
	225	**167 060 020**	5	0.178	8	13	165	132	175	25	39	M12
	250	**167 060 021**	5	0.657	9	13	183	143	200	25	39	M12
	280	**167 060 022**	5	0.212	10	13	198	156	200	25	39	M12
	315	**167 060 023**	5	0.805	12	13	219	172	225	25	39	M12
	355	**167 060 024**	5	1.251	14	17	275	209	258	30	50	M16
	400	**167 060 025**	4	1.031	16	17	300	228	288	30	50	M16

PF 2 30 162 023

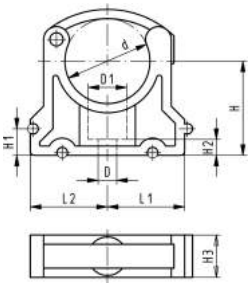

PF 2 30 162 023

KLIP-IT pipe clip type 061H PP metric

- * d16 to d32 without bracket
- d16 - d63: height designed for Ball Valve Type 546 und 543

Model:

- Material: Clip and safety clip PP black, UV resistant, bolts galvanized
- **Minimum order quantity: standard packagings SP**

	d [mm]	Code	SP	Weight [kg]
*	16	**167 061 035**	1	0.007
	20	**167 061 036**	1	0.007
	25	**167 061 037**	10	0.009
*	32	**167 061 038**	10	0.012
	40	**167 061 039**	10	0.027
	50	**167 061 040**	10	0.031
	63	**167 061 041**	10	0.052

	d [mm]	HoH +/- 2mm [mm]	closest inch [inch]	D1 [mm]	D [mm]	L1 [mm]	L2 [mm]	H [mm]	H1 [mm]	H2 [mm]	H3 [mm]	SC
*	16	17	⅜	11	6	14	17	27	10	6	16	M5
	20	21	½	11	6	17	19	27	10	6	16	M5
	25	27	¾	11	6	19	22	30	10	6	16	M5
*	32	37	1	11	6	24	27	36	10	6	16	M5
	40	44	1 ¼	14	7	34	34	44	10	7	22	M6
	50	52	1 ½	14	7	37	37	51	10	7	22	M6
	63	67	2	17	9	45	45	64	10	10	25	M8

PVC-C accessories

Tangit solvent cement for PVC-C

PF 2 28 473 006

Code	Weight [kg]	
799 298 027	0.700	

Tangit Dytex special solvent cement

Model:

- Special solvent cement, transparent.

- For concentrated acids and strong oxidizing agents the use of Dytex is recommended
- 1.350 kg (net) tin

PF 2 28 473 003

Code	Weight [kg]	
799 298 016	0.668	

Cap for cement

Model:

- Cap prevents the evaporation of the solvent whilst using the Tangit cement
- Tangit cement

PF 2 28 473 009

Code	Weight [kg]	
799 298 028	0.030	

Tangit cleaner

Model:

- 1 litre tin

PF 2 28 473 002

Code	Weight [kg]	
799 298 010	0.868	

Round brush

PF 2 30 217 004

Code	Weight [kg]	
799 299 001	0.004	
799 299 002	0.006	

PF 2 30 217 005

Flat brush

Code	Weight [kg]
799 299 003	0.015
799 299 004	0.035
799 299 005	0.053

PF 3 25 117 309

PPC Plastic pipe cutter

- For cutting plastic pipes d10 - d160

Article	d-d [mm]	Code	SP	Weight [kg]	Closest inch [inch]
PPC 63, s max. = 7.2mm	10 - 63	**790 109 001**	1	0.865	⅛ - 2
PPC 110, s max. = 12.7mm	50 - 110	**790 109 002**	1	1.624	1 ½ - 4
PPC 160, s max. = 19.0mm	110 - 160	**790 109 003**	1	2.212	4 - 6

PF 3 25 117 909

Replacement cutting wheels

- **for plastic pipe cutter**

d-d [mm]	Article	Code	SP	Weight [kg]
10 - 63	SR 63 max. s=7,2 mm	**790 109 011**	50	0.004
50 - 110	SR 110/160 max. s=12,7 mm	**790 109 012**	50	0.015
110 - 160	SR 160 max. s=19,0 mm	**790 109 013**	30	0.023

PF 3 25 117 325

Alignment Tool

- To align and position pipes in the dimension range d 110 - 400 mm. The pipes are clamped in the vice, the axial movement takes placed by a chain drive. The chain is totated by the ratched (square 19 mm).

Article	Code	SP	Weight [kg]
Alignment Tool	**790 109 108**	0	15.000
Ratch	**790 109 107**	0	1.220

PF 2 35 268 001

Chamfering tool

d-d [mm]	Size [mm]	Code	SP	Weight [kg]	Closest inch [inch]
16 - 75	1	**799 495 145**	0	0.720	⅜ - 2 ½
32 - 200	2	**799 495 146**	0	0.992	1 - 8

PF 2 55 338 999

Marker

Type	Code	Weight [kg]
silver	**799 350 364**	0.010

PF 3 25 117 316

Timer with 2 stop times

Code	SP	Weight [kg]
790 114 028	1	0.088

Notes

PVC-C Valves

	Page
Ball valves	38
Diaphragm valves new generation	58
Diaphragm valves	60
Butterfly valves	61
Cone check valves	67
Process control valves	71
Pressure regulating valves	72
Strainers	77
Ball valves electric	80
Ball valves pneumatic	106
Diaphragm valves pneumaticNew generation	135
Diaphragm valves pneumatic	150
Butterfly valves electric	153
Butterfly valves pneumatic	161

Ball valves

546

Ball valve type 546 PVC-C
With mounting inserts
With solvent cement sockets metric

DN10/15 - 50

Model:

- For easy installation and removal
- Ball seals PTFE
- Integrated stainless steel mounting inserts
- z-dimension, valve end and union nut are **not compatible** with type 346 (DN10/15-50) resp. type 370 (DN65-100)

Option:

- Individual configuration of the valve (see diagram)
- Multifunctional module with integrated limit switches
- Pneumatic or electric actuators from +GF+

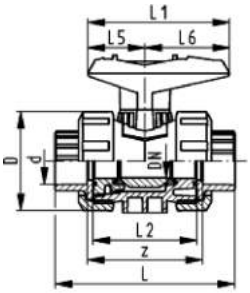

d [mm]	DN [mm]	PN [bar]	kv-value (Δp=1 bar) [l/min]	EPDM Code	SP	Weight [kg]	FPM Code	SP	Weight [kg]
16	10	16	71	**163 546 061**	1	0.160	**163 546 071**	1	0.160
20	15	16	185	**163 546 062**	1	0.169	**163 546 072**	1	0.160
25	20	16	350	**163 546 063**	1	0.255	**163 546 073**	1	0.245
32	25	16	700	**163 546 064**	1	0.370	**163 546 074**	1	0.373
40	32	16	1000	**163 546 065**	1	0.648	**163 546 075**	1	0.658
50	40	16	1600	**163 546 066**	1	0.894	**163 546 076**	1	0.890
63	50	16	3100	**163 546 067**	1	1.653	**163 546 077**	1	1.662
75	65	16	5000	**163 546 068**	1	3.552	**163 546 078**	1	4.122
90	80	16	7000	**163 546 069**	1	6.646	**163 546 079**	1	6.698
110	100	16	11000	**163 546 070**	1	9.697	**163 546 080**	1	12.700

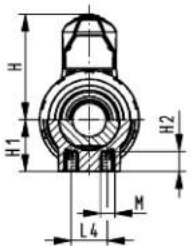

d [mm]	D [mm]	H [mm]	H1 [mm]	H2 [mm]	L [mm]	L1 [mm]	L2 [mm]	L4 [mm]	L5 [mm]	L6 [mm]	M	z [mm]	closest inch [inch]
16	50	57	27	12	92	77	56	25	32	45	M6	64	⅜
20	50	57	27	12	95	77	56	25	32	45	M6	64	½
25	58	67	30	12	110	97	65	25	39	58	M6	72	¾
32	68	73	36	12	123	97	71	25	39	58	M6	79	1
40	84	90	44	15	146	128	85	45	54	74	M8	94	1 ¼
50	97	97	51	15	157	128	89	45	54	74	M8	95	1 ½
63	124	116	64	15	183	152	101	45	66	87	M8	107	2
75	166	149	85	15	233	270	136	70	64	206	M8	144	2 ½
90	200	161	105	15	254	270	141	70	64	206	M8	151	3
110	238	178	123	22	301	320	164	120	64	256	M12	174	4

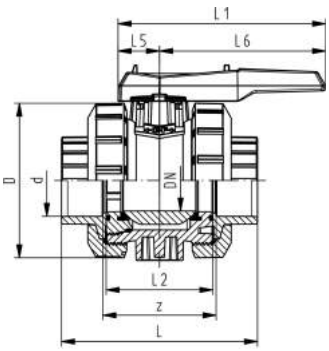

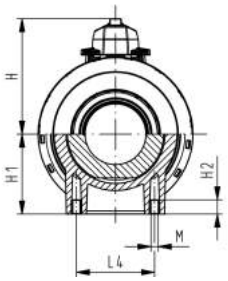

PF 2 32 541 801

DN10/15 - 50

Ball valve type 546 PVC-C
With lockable handle
With solvent cement sockets metric

Model:

- For easy installation and removal
- Ball seals PTFE
- Integrated stainless steel mounting inserts
- z-dimension, valve end and union nut are **not compatible** with type 346 (DN10/15-50) resp. type 370 (DN65-100)
- Lockable hand lever with ratchet settings

Option:

- Individual configuration of the valve (see diagram)
- Multifunctional module with integrated limit switches
- Pneumatic or electric actuators from +GF+

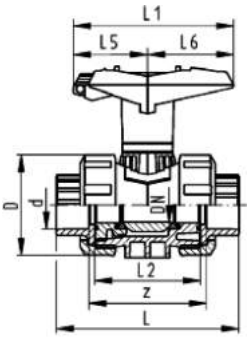

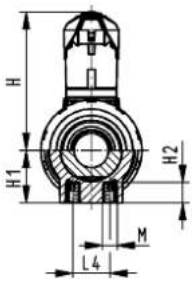

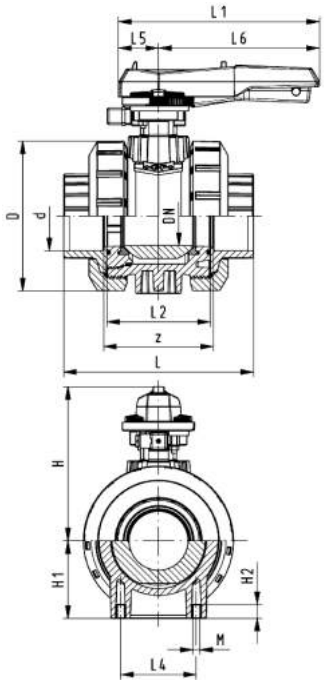

d [mm]	DN [mm]	PN [bar]	kv-value (Δp=1 bar) [l/min]	EPDM Code	SP	Weight [kg]	FPM Code	SP	Weight [kg]
16	10	16	71	**163 546 081**	1	0.175	**163 546 091**	1	0.175
20	15	16	185	**163 546 082**	1	0.175	**163 546 092**	1	0.175
25	20	16	350	**163 546 083**	1	0.270	**163 546 093**	1	0.270
32	25	16	700	**163 546 084**	1	0.390	**163 546 094**	1	0.390
40	32	16	1000	**163 546 085**	1	0.700	**163 546 095**	1	0.700
50	40	16	1600	**163 546 086**	1	0.930	**163 546 096**	1	0.930
63	50	16	3100	**163 546 087**	1	1.695	**163 546 097**	1	1.695
75	65	16	5000	**163 546 088**	1	4.900	**163 546 098**	1	4.900
90	80	16	7000	**163 546 089**	1	6.647	**163 546 099**	1	7.400
110	100	16	11000	**163 546 090**	1	11.600	**163 546 100**	1	0.000

d [mm]	D [mm]	H [mm]	H1 [mm]	H2 [mm]	L [mm]	L1 [mm]	L2 [mm]	L4 [mm]	L5 [mm]	L6 [mm]	M	z [mm]	closest inch [inch]
16	50	79	27	12	92	87	56	25	42	45	M6	64	⅜
20	50	79	27	12	95	87	56	25	42	45	M6	64	½
25	58	88	30	12	110	108	65	25	50	58	M6	72	¾
32	68	94	36	12	123	108	71	25	50	58	M6	79	1
40	84	113	44	15	146	140	85	45	66	75	M8	94	1 ¼
50	97	119	51	15	157	140	89	45	66	75	M8	95	1 ½
63	124	141	64	15	183	165	101	45	78	87	M8	107	2
75	166	224	85	15	233	270	136	70	64	206	M8	144	2 ½
90	200	235	105	15	254	270	141	70	64	206	M8	151	3
110	238	245	123	22	301	320	164	120	64	256	M12	174	4

PF 2 32 541 801

DN10/15 - 50

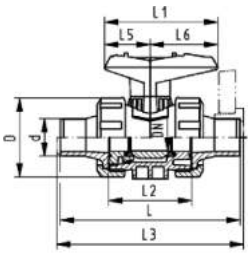

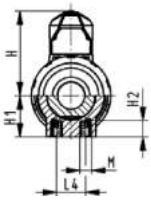

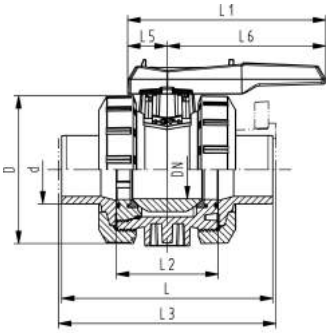

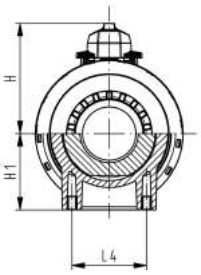

PF 2 32 541 801

Ball valve type 546 PVC-C
With mounting inserts
With solvent cement spigots metric

Model:

- For easy installation and removal
- Ball seals PTFE
- Integrated stainless steel mounting inserts
- z-dimension, valve end and union nut are **not compatible** with type 346 (DN10/15-50) resp. type 370 (DN65-100)

Option:

- Individual configuration of the valve (see diagram)
- Multifunctional module with integrated limit switches
- Pneumatic or electric actuators from +GF+

d [mm]	DN [mm]	PN [bar]	kv-value (Δp=1 bar) [l/min]	EPDM Code	SP	Weight [kg]	FPM Code	SP	Weight [kg]
16	10	16	71	**163 546 381**	1	0.162	**163 546 391**	1	0.162
20	15	16	185	**163 546 382**	1	0.162	**163 546 392**	1	0.162
25	20	16	350	**163 546 383**	1	0.247	**163 546 393**	1	0.247
32	25	16	700	**163 546 384**	1	0.367	**163 546 394**	1	0.367
40	32	16	1000	**163 546 385**	1	0.665	**163 546 395**	1	0.665
50	40	16	1600	**163 546 386**	1	0.895	**163 546 396**	1	0.895
63	50	16	3100	**163 546 387**	1	1.655	**163 546 397**	1	1.655
75	65	16	5000	**163 546 388**	1	5.500	**163 546 398**	1	5.500
90	80	16	7000	**163 546 389**	1	8.200	**163 546 399**	1	8.200
110	100	16	11000	**163 546 390**	1	12.900	**163 546 400**	1	12.900

d [mm]	D [mm]	H [mm]	H1 [mm]	H2 [mm]	L [mm]	L1 [mm]	L2 [mm]	L3 [mm]	L4 [mm]	L5 [mm]	L6 [mm]	M	closest inch [inch]
16	50	57	27	12	114	77	56		25	32	45	M6	⅜
20	50	57	27	12	124	77	56	130	25	32	45	M6	½
25	58	67	30	12	144	97	65	150	25	39	58	M6	¾
32	68	73	36	12	154	97	71	160	25	39	58	M6	1
40	84	90	44	15	174	128	85	180	45	54	74	M8	1 ¼
50	97	97	51	15	194	128	89	200	45	54	74	M8	1 ½
63	124	116	64	15	224	152	101	230	45	66	87	M8	2
75	166	149	85	15	284	270	136	290	70	64	206	M8	2 ½
90	200	161	105	15	300	270	141	310	70	64	206	M8	3
110	238	178	123	22	340	320	164	350	120	64	256	M12	4

Ball valve type 546 PVC-C
With mounting inserts
With backing flanges PP-st metric

Model:

- For easy installation and removal
- Ball seals PTFE
- Integrated stainless steel mounting inserts
- z-dimension, valve end and union nut are **not compatible** with type 346 (DN10/15-50) resp. type 370 (DN65-100)
- Overall length according to EN 558
- Connecting dimesnsion: ISO 7005, EN 1092, BS 4504, DIN 2501

Option:

- Individual configuration of the valve (see diagram)
- Multifunctional module with integrated limit switches
- Pneumatic or electric actuators from +GF+

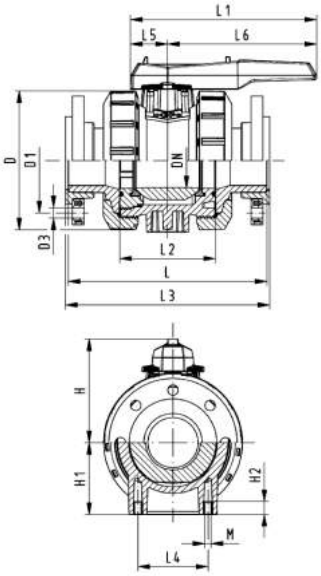

PF 2 32 541 801

d [mm]	DN [mm]	PN [bar]	kv-value (Δp=1 bar) [l/min]	EPDM Code	SP	Weight [kg]	FPM Code	SP	Weight [kg]
75	65	16	5000	**163 546 108**	1	6.000	**163 546 118**	1	6.546
90	80	16	7000	**163 546 109**	1	9.501	**163 546 119**	1	9.320
110	100	16	11000	**163 546 110**	1	14.200	**163 546 120**	1	14.200

d [mm]	D [mm]	D1 [mm]	D3 [mm]	H [mm]	H1 [mm]	L [mm]	L1 [mm]	L2 [mm]	L3 [mm]	L4 [mm]	L5 [mm]	L6 [mm]	M
75	166	145	18	149	85	284	270	136	290	70	64	206	8
90	200	160	18	161	105	300	270	141	310	70	64	206	8
110	238	180	18	178	123	340	320	164	350	120	64	256	12

DN10/15 - 50

Ball valve type 546 PVC-C
With mounting inserts
With threaded sockets Rp

Model:

- For easy installation and removal
- Ball seals PTFE
- Integrated stainless steel mounting inserts
- z-dimension, valve end and union nut are **not compatible** with type 346 (DN10/15-50) resp. type 370 (DN65-100)

Option:

- Individual configuration of the valve (see diagram)
- Multifunctional module with integrated limit switches
- Pneumatic or electric actuators from +GF+

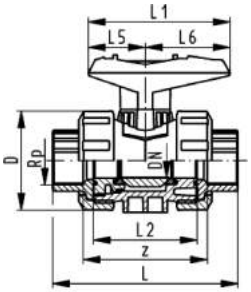

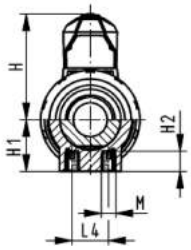

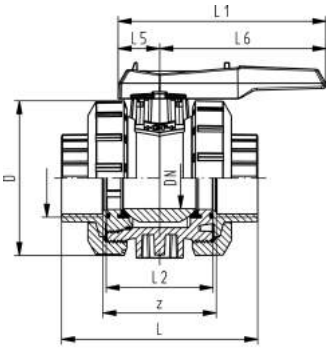

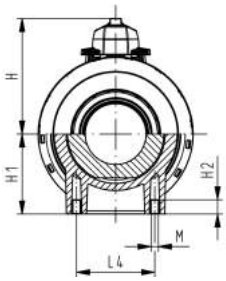

Rp [inch]	DN [mm]	PN [bar]	kv-value (Δp=1 bar) [l/min]	EPDM Code	SP	Weight [kg]	FPM Code	SP	Weight [kg]
⅜	10	10	71	**163 546 401**	1	0.162	**163 546 411**	1	0.162
½	15	10	185	**163 546 402**	1	0.162	**163 546 412**	1	0.162
¾	20	10	350	**163 546 403**	1	0.247	**163 546 413**	1	0.247
1	25	10	700	**163 546 404**	1	0.367	**163 546 414**	1	0.367
1 ¼	32	10	1000	**163 546 405**	1	0.665	**163 546 415**	1	0.665
1 ½	40	10	1600	**163 546 406**	1	0.895	**163 546 416**	1	0.895
2	50	10	3100	**163 546 407**	1	1.655	**163 546 417**	1	1.655
2 ½	65	10	5000	**163 546 408**	1	5.400	**163 546 418**	1	5.400
3	80	10	7000	**163 546 409**	1	8.100	**163 546 419**	1	8.100
4	100	10	11000	**163 546 410**	1	12.700	**163 546 420**	1	12.700

Rp [inch]	D [mm]	H [mm]	H1 [mm]	H2 [mm]	L [mm]	L1 [mm]	L2 [mm]	L4 [mm]	L5 [mm]	L6 [mm]	M	z [mm]
⅜	50	57	27	12	95	77	56	25	32	45	M6	69
½	50	57	27	12	100	77	56	25	32	45	M6	67
¾	58	67	30	12	114	97	65	25	39	58	M6	78
1	68	73	36	12	127	97	71	25	39	58	M6	85
1 ¼	84	90	44	12	146	128	85	45	54	74	M8	100
1 ½	97	97	51	15	152	128	89	45	54	74	M8	106
2	124	116	64	15	177	152	101	45	66	87	M8	121
2 ½	166	149	85	15	233	270	136	70	64	206	M8	144
3	200	161	105	15	254	270	141	70	64	206	M8	151
4	238	178	123	22	301	320	164	120	64	256	M12	174

PF 2 32 541 801

DN10/15 - 50

Ball valve type 546 PVC-C
With mounting inserts
With solvent cement sockets Inch ASTM
Including 2 threaded union ends NPT

Model:

- For easy installation and removal
- Ball seals PTFE
- Integrated stainless steel mounting inserts
- Threaded valve ends are only enclosed for DN10/15-50
- z-dimension, valve end and union nut are **not compatible** with type 346 (DN10/15-50) resp. type 370 (DN65-100)

Option:

- Individual configuration of the valve (see diagram)
- Multifunctional module with integrated limit switches
- Pneumatic or electric actuators from +GF+

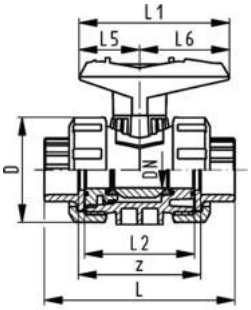

Size [inch]	DN [mm]	PN [bar]	kv-value (Δp=1 bar) [l/min]	EPDM Code	SP	Weight [kg]	FPM Code	SP	Weight [kg]
⅜	10	16	71	**163 546 341**	1	0.194	**163 546 351**	1	0.194
½	15	16	185	**163 546 342**	1	0.248	**163 546 352**	1	0.250
¾	20	16	350	**163 546 343**	1	0.358	**163 546 353**	1	0.267
1	25	16	700	**163 546 344**	1	0.517	**163 546 354**	1	0.520
1 ¼	32	16	1000	**163 546 345**	1	0.652	**163 546 355**	1	0.810
1 ½	40	16	1600	**163 546 346**	1	1.166	**163 546 356**	1	1.180
2	50	16	3100	**163 546 347**	1	2.055	**163 546 357**	1	2.078
2 ½	65	16	5000	**163 546 348**	1	5.400	**163 546 358**	1	5.400
3	80	16	7000	**163 546 349**	1	5.821	**163 546 359**	1	6.689
4	100	16	11000	**163 546 350**	1	12.800	**163 546 360**	1	12.800

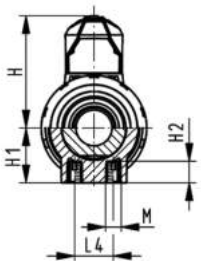

Size [inch]	D [mm]	H [mm]	H1 [mm]	L [mm]	L1 [mm]	L2 [mm]	L4 [mm]	L5 [mm]	L6 [mm]	M	z [mm]
⅜	50	57	27	105	77	56	25	32	45	M6	67
½	50	57	27	105	77	56	25	32	45	M6	61
¾	58	67	30	121	97	65	25	39	58	M6	70
1	68	73	36	133	97	71	25	39	58	M6	76
1 ¼	84	90	44	154	128	85	45	54	74	M8	90
1 ½	97	97	51	164	128	89	45	54	74	M8	94
2	124	116	64	183	152	101	45	66	87	M8	107
2 ½	166	149	85	233	270	136	70	64	206	M8	144
3	200	161	105	254	270	141	70	64	206	M8	151
4	238	178	123	301	320	164	120	64	256	M12	174

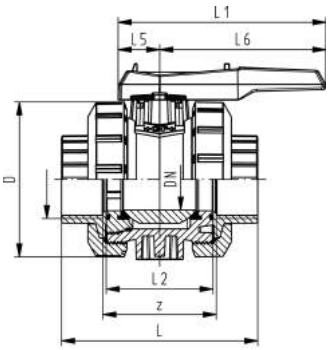

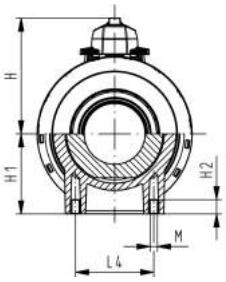

PF 2 32 541 803

Ball valve type 546 PVC-C
With mounting inserts
With backing flanges PP-st Inch ANSI

Model:

- For easy installation and removal
- Ball seals PTFE
- Integrated stainless steel mounting inserts
- z-dimension, valve end and union nut are **not compatible** with type 346 (DN10/15-50) resp. type 370 (DN65-100)
- Overall length according to EN 558
- Connecting dimension ANSI/ASME B 16.5 / ASTM D 4024

Option:

- Individual configuration of the valve (see diagram)
- Multifunctional module with integrated limit switches
- Pneumatic or electric actuators from +GF+

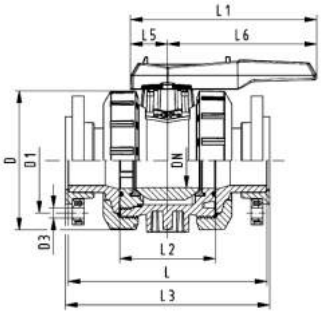

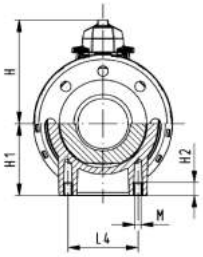

PF 2 32 541 803

Size [inch]	DN [mm]	PN [bar]	kv-value (Δp=1 bar) [l/min]	EPDM Code	SP	Weight [kg]	FPM Code	SP	Weight [kg]
2 ½	65	16	5000	**163 546 168**	1	6.000	**163 546 178**	1	6.000
3	80	16	7000	**163 546 169**	1	9.100	**163 546 179**	1	9.100
4	100	16	11000	**163 546 170**	1	14.200	**163 546 180**	1	14.200

Size [inch]	D [mm]	D1 [mm]	D3 [mm]	H [mm]	H1 [mm]	L [mm]	L1 [mm]	L2 [mm]	L3 [mm]	L4 [mm]	L5 [mm]	L6 [mm]	M
2 ½	166	140	19	149	85	284	270	136	290	70	64	206	8
3	200	152	19	161	105	300	270	141	310	70	64	206	8
4	238	191	19	178	123	340	320	164	350	120	64	256	12

543

3-Way ball valve type 543 PVC-C Horizontal/T-port With solvent cement sockets metric

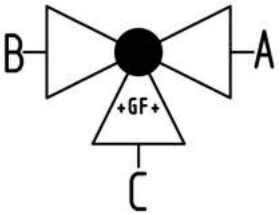

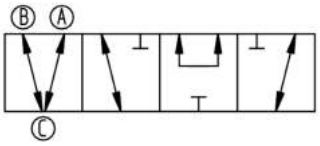

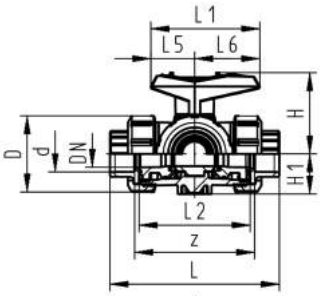

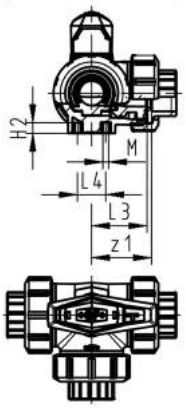

Model:

- For easy installation and removal (valve end and union nut are compatible with type 546)
- Ball seals PTFE
- Pneumatic or electric actuator available separately
- Angle of operation 360° without turn limiter
- Turn limiter 90° enclosed, in different positions usable as a clip-on ring
- Integrated stainless steel mounting inserts
- Delivery status A-B-C opened, see flow scheme

d [mm]	DN [mm]	PN [bar]	kv-value (Δp=1 bar) [l/min]	EPDM Code	SP	Weight [kg]	FPM Code	SP	Weight [kg]
16	10	10	140	**163 543 201**	1	0.264	**163 543 211**	1	0.264
20	15	10	200	**163 543 202**	1	0.271	**163 543 212**	1	0.271
25	20	10	470	**163 543 203**	1	0.389	**163 543 213**	1	0.389
32	25	10	793	**163 543 204**	1	0.561	**163 543 214**	1	0.590
40	32	10	1290	**163 543 205**	1	1.007	**163 543 215**	1	1.007
50	40	10	1910	**163 543 206**	1	1.487	**163 543 216**	1	1.487
63	50	10	3100	**163 543 207**	1	2.889	**163 543 217**	1	2.889

d [mm]	D [mm]	H [mm]	H1 [mm]	H2 [mm]	L [mm]	L1 [mm]	L2 [mm]	L3 [mm]	L4 [mm]	L5 [mm]	L6 [mm]	M	z [mm]	z1 [mm]
16	50	57	28	8	109	77	73	36	25	32	45	6	81	40
20	50	57	28	8	112	77	73	36	25	32	45	6	81	40
25	58	67	32	8	131	97	86	43	25	39	58	6	94	47
32	68	73	36	8	151	97	99	50	25	39	58	6	107	54
40	84	90	45	9	181	128	120	60	45	54	74	8	130	65
50	97	97	51	9	205	128	137	69	45	54	74	8	143	72
63	124	116	65	9	261	152	179	89	45	66	87	8	185	92

d [mm]	closest inch [inch]
16	⅜
20	½
25	¾
32	1
40	1 ¼
50	1 ½
63	2

PF 2 32 002 801

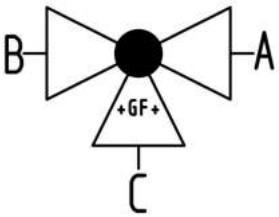

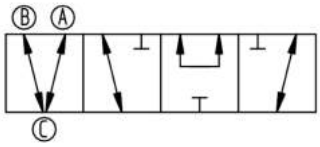

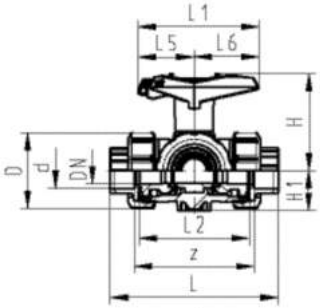

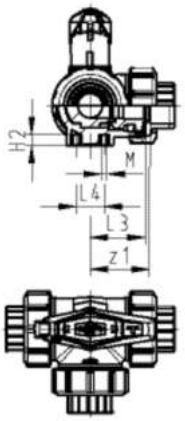

3-Way ball valve type 543 PVC-C
Horizontal/T-port
With lockable handle
With solvent cement sockets metric

Model:

- For easy installation and removal (valve end and union nut are compatible with type 546)
- Ball seals PTFE
- Pneumatic or electric actuator available separately
- Angle of operation 360° without turn limiter
- Turn limiter 90° enclosed, in different positions usable as a clip-on ring
- Integrated stainless steel mounting inserts
- Multifunctional lever red with ratched setting 45°, lockable
- Delivery status A-B-C opened, see flow scheme

d [mm]	DN [mm]	PN [bar]	kv-value (Δp=1 bar) [l/min]	EPDM Code	SP	Weight [kg]	FPM Code	SP	Weight [kg]
16	10	10	140	**163 543 401**	1	0.280	**163 543 411**	1	0.280
20	15	10	200	**163 543 402**	1	0.286	**163 543 412**	1	0.286
25	20	10	470	**163 543 403**	1	0.408	**163 543 413**	1	0.408
32	25	10	793	**163 543 404**	1	0.609	**163 543 414**	1	0.609
40	32	10	1290	**163 543 405**	1	1.031	**163 543 415**	1	1.031
50	40	10	1910	**163 543 406**	1	1.512	**163 543 416**	1	1.512
63	50	10	3100	**163 543 407**	1	2.923	**163 543 417**	1	2.923

d [mm]	D [mm]	H [mm]	H1 [mm]	H2 [mm]	L [mm]	L1 [mm]	L2 [mm]	L3 [mm]	L4 [mm]	L5 [mm]	L6 [mm]	M	z [mm]	z1 [mm]
16	50	79	28	8	109	87	73	36	25	42	45	6	81	40
20	50	79	28	8	112	87	73	36	25	42	45	6	81	40
25	58	88	32	8	131	108	86	43	25	50	58	6	94	47
32	68	94	36	8	151	108	99	50	25	50	58	6	107	54
40	84	113	45	9	181	141	120	60	45	66	75	8	130	65
50	97	119	51	9	205	141	137	69	45	66	75	8	143	72
63	124	141	65	9	261	165	179	89	45	78	87	8	185	92

d [mm]	closest inch [inch]
16	⅜
20	½
25	¾
32	1
40	1 ¼
50	1 ½
63	2

PF 2 32 002 801

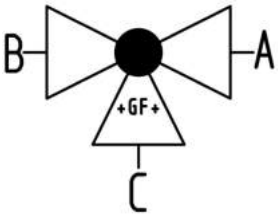

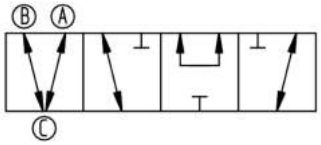

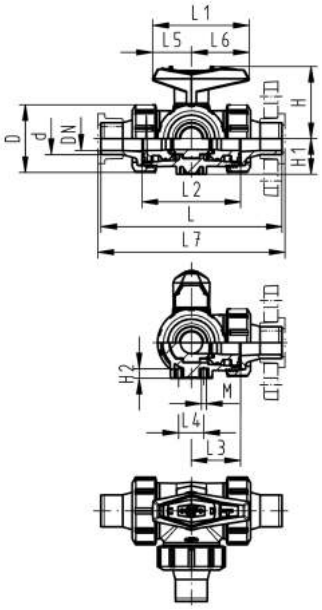

3-Way ball valve type 543 PVC-C Horizontal/T-port With solvent cement spigots metric

Model:

- For easy installation and removal (valve end and union nut are compatible with type 546)
- Ball seals PTFE
- Pneumatic or electric actuator available separately
- Angle of operation 360° without turn limiter
- Turn limiter 90° enclosed, in different positions usable as a clip-on ring
- Integrated stainless steel mounting inserts
- Delivery status A-B-C opened, see flow scheme

d [mm]	DN [mm]	PN [bar]	kv-value (Δp=1 bar) [l/min]	EPDM Code	SP	Weight [kg]	FPM Code	SP	Weight [kg]
16	10	10	140	**163 543 221**	1	0.264	**163 543 231**	1	0.264
20	15	10	200	**163 543 222**	1	0.271	**163 543 232**	1	0.271
25	20	10	470	**163 543 223**	1	0.389	**163 543 233**	1	0.389
32	25	10	793	**163 543 224**	1	0.590	**163 543 234**	1	0.590
40	32	10	1290	**163 543 225**	1	1.007	**163 543 235**	1	1.007
50	40	10	1910	**163 543 226**	1	1.487	**163 543 236**	1	1.487
63	50	10	3100	**163 543 227**	1	2.889	**163 543 237**	1	2.889

d [mm]	D [mm]	H [mm]	H1 [mm]	H2 [mm]	L [mm]	L1 [mm]	L2 [mm]	L3 [mm]	L4 [mm]	L5 [mm]	L6 [mm]	L7 [mm]	M	closest inch [inch]
16	50	57	28	8	131	77	73	36	25	32	45	137	6	⅜
20	50	57	28	8	141	77	73	36	25	32	45	147	6	½
25	58	67	32	8	165	97	86	43	25	39	58	171	6	¾
32	68	73	36	8	182	97	99	50	25	39	58	188	6	1
40	84	90	45	9	209	128	120	60	45	54	74	215	8	1 ¼
50	97	97	51	9	242	128	137	69	45	54	74	248	8	1 ½
63	124	116	65	9	302	152	179	89	45	66	87	308	8	2

PF 2 32 002 801

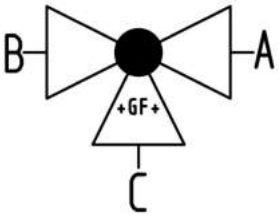

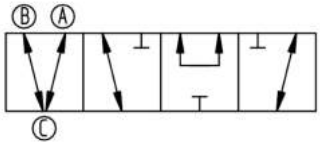

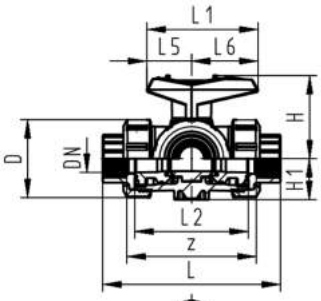

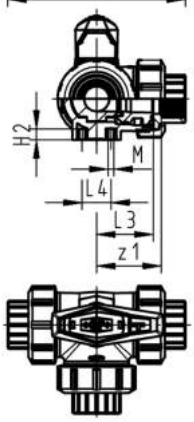

3-Way ball valve type 543 PVC-C Horizontal/T-port With threaded sockets Rp

Model:

- For easy installation and removal (valve end and union nut are compatible with type 546)
- Ball seals PTFE
- Pneumatic or electric actuator available separately
- Angle of operation 360° without turn limiter
- Turn limiter 90° enclosed, in different positions usable as a clip-on ring
- Integrated stainless steel mounting inserts
- Delivery status A-B-C opened, see flow scheme

Rp [inch]	DN [mm]	PN [bar]	kv-value (Δp=1 bar) [l/min]	EPDM Code	SP	Weight [kg]	FPM Code	SP	Weight [kg]
⅜	10	10	140	**163 543 241**	1	0.264	**163 543 251**	1	0.264
½	15	10	200	**163 543 242**	1	0.271	**163 543 252**	1	0.271
¾	20	10	470	**163 543 243**	1	0.389	**163 543 253**	1	0.389
1	25	10	793	**163 543 244**	1	0.590	**163 543 254**	1	0.590
1 ¼	32	10	1290	**163 543 245**	1	1.007	**163 543 255**	1	1.007
1 ½	40	10	1910	**163 543 246**	1	1.487	**163 543 256**	1	1.487
2	50	10	3100	**163 543 247**	1	2.889	**163 543 257**	1	2.889

Rp [inch]	D [mm]	H [mm]	H1 [mm]	H2 [mm]	L [mm]	L1 [mm]	L2 [mm]	L3 [mm]	L4 [mm]	L5 [mm]	L6 [mm]	M	z [mm]	z1 [mm]
⅜	50	57	28	8	113	77	73	36	25	32	45	6	87	43
½	50	57	28	8	116	77	73	36	25	32	45	6	85	42
¾	58	67	32	8	135	97	86	43	25	39	58	6	100	50
1	68	73	36	8	155	97	99	50	25	39	58	6	113	57
1 ¼	84	90	45	9	179	128	120	60	45	54	74	8	134	67
1 ½	97	97	51	9	201	128	137	69	45	54	74	8	155	78
2	124	116	65	9	255	152	179	89	45	66	87	8	199	99

PF 2 32 002 801

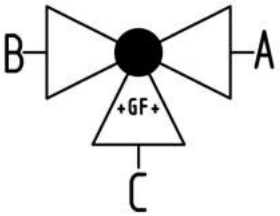

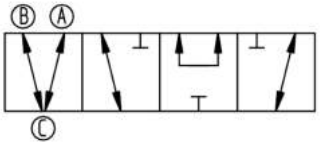

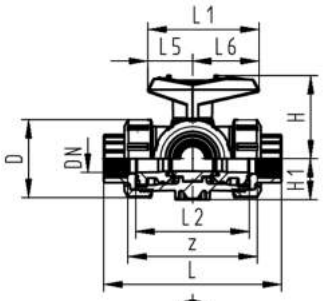

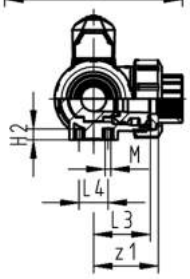

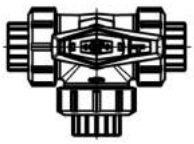

PF 2 32 002 803

3-Way ball valve type 543 PVC-C Horizontal/T-port With threaded sockets NPT

Model:

- For easy installation and removal (valve end and union nut are compatible with type 546)
- Ball seals PTFE
- Pneumatic or electric actuator available separately
- Angle of operation 360° without turn limiter
- Turn limiter 90° enclosed, in different positions usable as a clip-on ring
- Integrated stainless steel mounting inserts
- Delivery status A-B-C opened, see flow scheme

NPT [inch]	DN [mm]	PN [bar]	kv-value (Δp=1 bar) [l/min]	EPDM Code	SP	Weight [kg]	FPM Code	SP	Weight [kg]
⅜	10	10	140	**163 543 301**	1	0.264	**163 543 311**	1	0.264
½	15	10	200	**163 543 302**	1	0.271	**163 543 312**	1	0.271
¾	20	10	470	**163 543 303**	1	0.389	**163 543 313**	1	0.389
1	25	10	793	**163 543 304**	1	0.590	**163 543 314**	1	0.590
1 ¼	32	10	1290	**163 543 305**	1	1.007	**163 543 315**	1	1.007
1 ½	40	10	1910	**163 543 306**	1	1.487	**163 543 316**	1	1.487
2	50	10	3100	**163 543 307**	1	2.889	**163 543 317**	1	2.889

NPT [inch]	D [mm]	H [mm]	H1 [mm]	H2 [mm]	L [mm]	L1 [mm]	L2 [mm]	L3 [mm]	L4 [mm]	L5 [mm]	L6 [mm]	M	z [mm]	z1 [mm]
⅜	50	57	28	8	115	77	73	36	25	32	45	6	87	43
½	50	57	28	8	114	77	73	36	25	32	45	6	81	40
¾	58	67	32	8	131	97	86	43	25	39	58	6	96	48
1	68	73	36	8	155	97	99	50	25	39	58	6	111	56
1 ¼	84	90	45	9	181	128	120	60	45	54	74	8	134	67
1 ½	97	97	51	9	205	128	137	69	45	54	74	8	159	80
2	124	116	65	9	261	152	179	89	45	66	87	8	213	106

3-Way ball valve type 543 PVC-C
Horizontal/T-port
With lockable handle
With solvent cement sockets ASTM

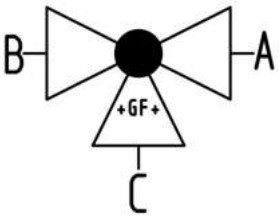

Model:

- For easy installation and removal (valve end and union nut are compatible with type 546)
- Ball seals PTFE
- Pneumatic or electric actuator available separately
- Angle of operation 360° without turn limiter
- Turn limiter 90° enclosed, in different positions usable as a clip-on ring
- Integrated stainless steel mounting inserts
- Multifunctional lever red with ratched setting 45°, lockable
- Delivery status A-B-C opened, see flow scheme

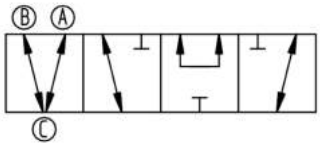

Size [inch]	DN [mm]	PN [bar]	kv-value (Δp=1 bar) [l/min]	EPDM Code	SP	Weight [kg]	FPM Code	SP	Weight [kg]
⅜	10	10	140	**163 543 441**	1	0.280	**163 543 451**	1	0.280
½	15	10	200	**163 543 442**	1	0.286	**163 543 452**	1	0.286
¾	20	10	470	**163 543 443**	1	0.408	**163 543 453**	1	0.408
1	25	10	793	**163 543 444**	1	0.609	**163 543 454**	1	0.609
1 ¼	32	10	1290	**163 543 445**	1	1.031	**163 543 455**	1	1.031
1 ½	40	10	1910	**163 543 446**	1	1.512	**163 543 456**	1	1.512
2	50	10	3100	**163 543 447**	1	2.923	**163 543 457**	1	2.923

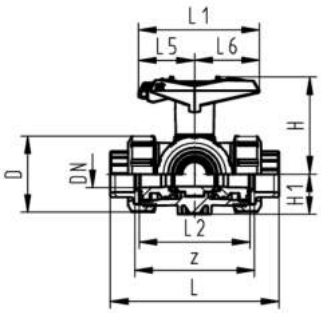

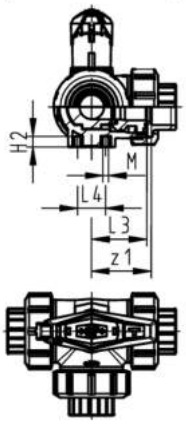

Size [inch]	D [mm]	H [mm]	H1 [mm]	H2 [mm]	L [mm]	L1 [mm]	L2 [mm]	L3 [mm]	L4 [mm]	L5 [mm]	L6 [mm]	M	z [mm]	z1 [mm]
⅜	50	79	28	8	123	87	73	36	25	42	45	6	85	42
½	50	79	28	8	122	87	73	36	25	42	45	6	77	38
¾	58	88	32	8	141	108	86	43	25	50	58	6	92	46
1	68	94	36	8	161	108	99	50	25	50	58	6	105	53
1 ¼	84	113	45	9	187	141	120	60	45	66	75	8	126	63
1 ½	97	119	51	9	213	141	137	69	45	66	75	8	143	72
2	124	141	65	9	261	165	179	89	45	78	87	8	185	92

PF 2 32 002 803

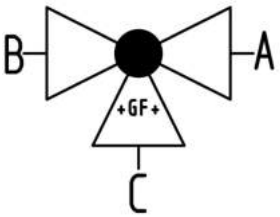

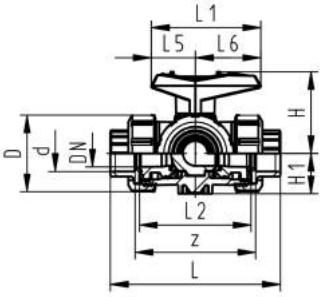

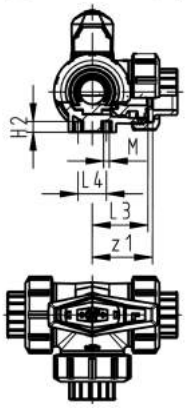

3-Way ball valve type 543 PVC-C Horizontal/L-port With solvent cement sockets metric

Model:

- For easy installation and removal (valve end and union nut are compatible with type 546)
- Ball seals PTFE
- Pneumatic or electric actuator available separately
- Angle of operation 360° without turn limiter
- Turn limiter 90° enclosed, in different positions usable as a clip-on ring
- Integrated stainless steel mounting inserts
- Delivery status A-C opened, see flow scheme

d [mm]	DN [mm]	PN [bar]	kv-value (Δp=1 bar) [l/min]	EPDM Code	SP	Weight [kg]	FPM Code	SP	Weight [kg]
16	10	10	50	**163 543 001**	1	0.265	**163 543 011**	1	0.265
20	15	10	75	**163 543 002**	1	0.272	**163 543 012**	1	0.272
25	20	10	150	**163 543 003**	1	0.391	**163 543 013**	1	0.391
32	25	10	280	**163 543 004**	1	0.598	**163 543 014**	1	0.598
40	32	10	480	**163 543 005**	1	1.018	**163 543 015**	1	1.018
50	40	10	620	**163 543 006**	1	1.509	**163 543 016**	1	1.509
63	50	10	1230	**163 543 007**	1	2.938	**163 543 017**	1	2.938

d [mm]	D [mm]	H [mm]	H1 [mm]	H2 [mm]	L [mm]	L1 [mm]	L2 [mm]	L3 [mm]	L4 [mm]	L5 [mm]	L6 [mm]	M	z [mm]	z1 [mm]
16	50	57	28	8	109	77	73	36	25	32	45	6	81	40
20	50	57	28	8	112	77	73	36	25	32	45	6	81	40
25	58	67	32	8	131	97	86	43	25	39	58	6	94	47
32	68	73	36	8	151	97	99	50	25	39	58	6	107	54
40	84	90	45	9	181	128	120	60	45	54	74	8	130	65
50	97	97	51	9	205	128	137	69	45	54	74	8	143	72
63	124	116	65	9	261	152	179	89	45	66	87	8	185	92

d [mm]	closest inch [inch]
16	⅜
20	½
25	¾
32	1
40	1 ¼
50	1 ½
63	2

PF 2 32 002 801

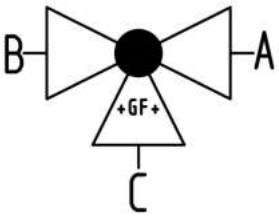

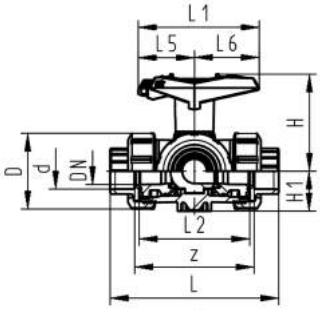

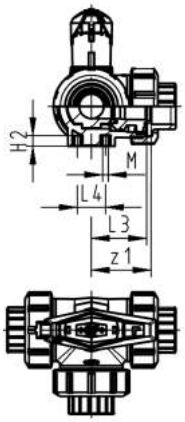

3-Way ball valve type 543 PVC-C
Horizontal/L-port
With lockable handle
With solvent cement sockets metric

Model:

- For easy installation and removal (valve end and union nut are compatible with type 546)
- Ball seals PTFE
- Pneumatic or electric actuator available separately
- Angle of operation 360° without turn limiter
- Turn limiter 90° enclosed, in different positions usable as a clip-on ring
- Integrated stainless steel mounting inserts
- Multifunctional lever red with ratched setting 45°, lockable
- Delivery status A-C opened, see flow scheme

d [mm]	DN [mm]	PN [bar]	kv-value (Δp=1 bar) [l/min]	EPDM Code	SP	Weight [kg]	FPM Code	SP	Weight [kg]
16	10	10	50	**163 543 381**	1	0.281	**163 543 391**	1	0.281
20	15	10	75	**163 543 382**	1	0.287	**163 543 392**	1	0.287
25	20	10	150	**163 543 383**	1	0.410	**163 543 393**	1	0.410
32	25	10	280	**163 543 384**	1	0.616	**163 543 394**	1	0.616
40	32	10	480	**163 543 385**	1	1.043	**163 543 395**	1	1.043
50	40	10	620	**163 543 386**	1	1.534	**163 543 396**	1	1.534
63	50	10	1230	**163 543 387**	1	2.972	**163 543 397**	1	2.972

d [mm]	D [mm]	H [mm]	H1 [mm]	H2 [mm]	L [mm]	L1 [mm]	L2 [mm]	L3 [mm]	L4 [mm]	L5 [mm]	L6 [mm]	M	z [mm]	z1 [mm]
16	50	79	28	8	109	87	73	36	25	42	45	6	81	40
20	50	79	28	8	112	87	73	36	25	42	45	6	81	40
25	58	88	32	8	131	108	86	43	25	50	58	6	94	47
32	68	94	36	8	151	108	99	50	25	50	58	6	107	54
40	84	113	45	9	181	141	120	60	45	66	75	8	130	65
50	97	119	51	9	205	141	137	69	45	66	75	8	143	72
63	124	141	65	9	261	165	179	89	45	78	87	8	185	92

d [mm]	closest inch [inch]
16	⅜
20	½
25	¾
32	1
40	1 ¼
50	1 ½
63	2

PF 2 32 002 801

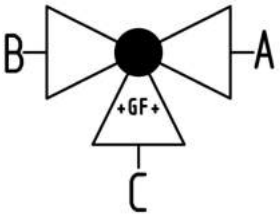

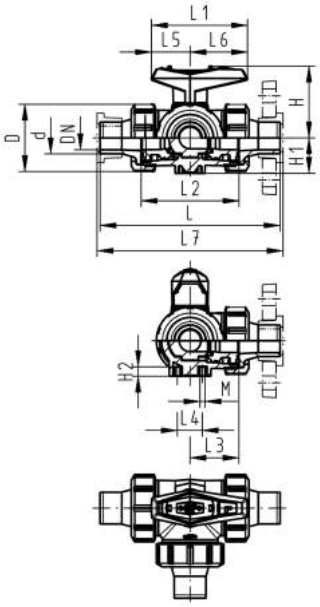

3-Way ball valve type 543 PVC-C Horizontal/L-port With solvent cement spigots metric

Model:

- For easy installation and removal (valve end and union nut are compatible with type 546)
- Ball seals PTFE
- Pneumatic or electric actuator available separately
- Angle of operation 360° without turn limiter
- Turn limiter 90° enclosed, in different positions usable as a clip-on ring
- Integrated stainless steel mounting inserts
- Delivery status A-C opened, see flow scheme

d [mm]	DN [mm]	PN [bar]	kv-value (Δp=1 bar) [l/min]	EPDM Code	SP	Weight [kg]	FPM Code	SP	Weight [kg]
16	10	10	50	**163 543 021**	1	0.272	**163 543 031**	1	0.272
20	15	10	75	**163 543 022**	1	0.282	**163 543 032**	1	0.282
25	20	10	150	**163 543 023**	1	0.408	**163 543 033**	1	0.408
32	25	10	280	**163 543 024**	1	0.624	**163 543 034**	1	0.624
40	32	10	480	**163 543 025**	1	1.041	**163 543 035**	1	1.041
50	40	10	620	**163 543 026**	1	1.578	**163 543 036**	1	1.578
63	50	10	1230	**163 543 027**	1	3.075	**163 543 037**	1	3.075

d [mm]	D [mm]	H [mm]	H1 [mm]	H2 [mm]	L [mm]	L1 [mm]	L2 [mm]	L3 [mm]	L4 [mm]	L5 [mm]	L6 [mm]	L7 [mm]	M	closest inch [inch]
16	50	57	28	8	131	77	73	36	25	32	45	137	6	⅜
20	50	57	28	8	141	77	73	36	25	32	45	147	6	½
25	58	67	32	8	165	97	86	43	25	39	58	171	6	¾
32	68	73	36	8	182	97	99	50	25	39	58	188	6	1
40	84	90	45	9	209	128	120	60	45	54	74	215	8	1 ¼
50	97	97	51	9	242	128	137	69	45	54	74	248	8	1 ½
63	124	116	65	9	302	152	179	89	45	66	87	308	8	2

PF 2 32 002 801

3-Way ball valve type 543 PVC-C Horizontal/L-port With threaded sockets Rp

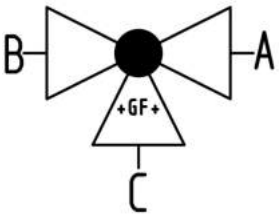

Model:

- For easy installation and removal (valve end and union nut are compatible with type 546)
- Ball seals PTFE
- Pneumatic or electric actuator available separately
- Angle of operation 360° without turn limiter
- Turn limiter 90° enclosed, in different positions usable as a clip-on ring
- Integrated stainless steel mounting inserts
- Delivery status A-C opened, see flow scheme

Rp [inch]	DN [mm]	PN [bar]	kv-value (Δp=1 bar) [l/min]	EPDM Code	SP	Weight [kg]	FPM Code	SP	Weight [kg]
⅜	10	10	50	**163 543 041**	1	0.265	**163 543 051**	1	0.265
½	15	10	75	**163 543 042**	1	0.272	**163 543 052**	1	0.272
¾	20	10	150	**163 543 043**	1	0.391	**163 543 053**	1	0.391
1	25	10	280	**163 543 044**	1	0.598	**163 543 054**	1	0.598
1 ¼	32	10	480	**163 543 045**	1	1.018	**163 543 055**	1	1.018
1 ½	40	10	620	**163 543 046**	1	1.509	**163 543 056**	1	1.509
2	50	10	1230	**163 543 047**	1	2.938	**163 543 057**	1	2.938

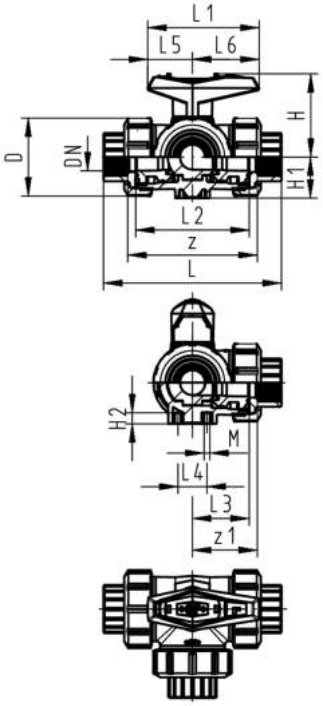

Rp [inch]	D [mm]	H [mm]	H1 [mm]	H2 [mm]	L [mm]	L1 [mm]	L2 [mm]	L3 [mm]	L4 [mm]	L5 [mm]	L6 [mm]	M	z [mm]	z1 [mm]
⅜	50	57	28	8	113	77	73	36	25	32	45	6	87	43
½	50	57	28	8	116	77	73	36	25	32	45	6	85	42
¾	58	67	32	8	135	97	86	43	25	39	58	6	100	50
1	68	73	36	8	155	97	99	50	25	39	58	6	113	57
1 ¼	84	90	45	9	179	128	120	60	45	54	74	8	134	67
1 ½	97	97	51	9	201	128	137	69	45	54	74	8	155	78
2	124	116	65	9	255	152	179	89	45	66	87	8	199	99

PF 2 32 002 801

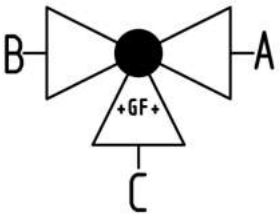

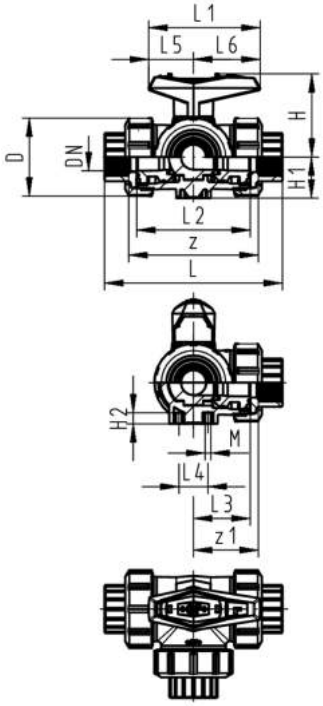

3-Way ball valve type 543 PVC-C Horizontal/L-port With threaded sockets NPT

Model:

- For easy installation and removal (valve end and union nut are compatible with type 546)
- Ball seals PTFE
- Pneumatic or electric actuator available separately
- Angle of operation 360° without turn limiter
- Turn limiter 90° enclosed, in different positions usable as a clip-on ring
- Integrated stainless steel mounting inserts
- Delivery status A-C opened, see flow scheme

NPT [inch]	DN [mm]	PN [bar]	kv-value (Δp=1 bar) [l/min]	EPDM Code	SP	Weight [kg]	FPM Code	SP	Weight [kg]
⅜	10	10	50	**163 543 101**	1	0.265	**163 543 111**	1	0.265
½	15	10	75	**163 543 102**	1	0.272	**163 543 112**	1	0.272
¾	20	10	150	**163 543 103**	1	0.391	**163 543 113**	1	0.391
1	25	10	280	**163 543 104**	1	0.598	**163 543 114**	1	0.598
1 ¼	32	10	480	**163 543 105**	1	1.018	**163 543 115**	1	1.018
1 ½	40	10	620	**163 543 106**	1	1.509	**163 543 116**	1	1.509
2	50	10	1230	**163 543 107**	1	2.938	**163 543 117**	1	2.938

NPT [inch]	D [mm]	H [mm]	H1 [mm]	H2 [mm]	L [mm]	L1 [mm]	L2 [mm]	L3 [mm]	L4 [mm]	L5 [mm]	L6 [mm]	M	z [mm]	z1 [mm]
⅜	50	57	28	8	115	77	73	36	25	32	45	6	87	43
½	50	57	28	8	114	77	73	36	25	32	45	6	81	40
¾	58	67	32	8	131	97	86	43	25	39	58	6	96	48
1	68	73	36	8	155	97	99	50	25	39	58	6	111	56
1 ¼	84	90	45	9	181	128	120	60	45	54	74	8	134	67
1 ½	97	97	51	9	205	128	137	69	45	54	74	8	159	80
2	124	116	65	9	261	152	179	89	45	66	87	8	213	106

PF 2 32 002 803

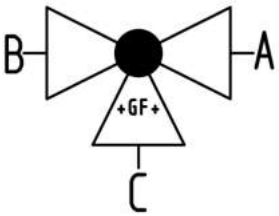

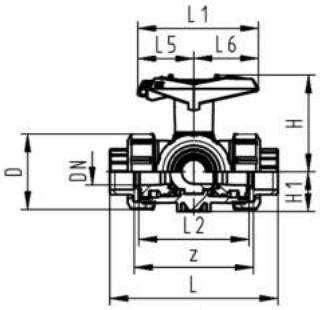

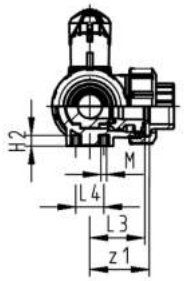

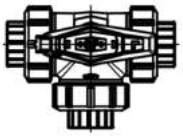

3-Way ball valve type 543 PVC-C
Horizontal/L-port
With lockable handle
With solvent cement sockets ASTM

Model:

- For easy installation and removal (valve end and union nut are compatible with type 546)
- Ball seals PTFE
- Pneumatic or electric actuator available separately
- Angle of operation 360° without turn limiter
- Turn limiter 90° enclosed, in different positions usable as a clip-on ring
- Integrated stainless steel mounting inserts
- Multifunctional lever red with ratched setting 45°, lockable
- Delivery status A-C opened, see flow scheme

Size [inch]	DN [mm]	PN [bar]	kv-value (Δp=1 bar) [l/min]	EPDM Code	SP	Weight [kg]	FPM Code	SP	Weight [kg]
⅜	10	10	50	**163 543 421**	1	0.281	**163 543 431**	1	0.281
½	15	10	75	**163 543 422**	1	0.287	**163 543 432**	1	0.287
¾	20	10	150	**163 543 423**	1	0.410	**163 543 433**	1	0.410
1	25	10	280	**163 543 424**	1	0.616	**163 543 434**	1	0.616
1 ¼	32	10	480	**163 543 425**	1	1.043	**163 543 435**	1	1.043
1 ½	40	10	620	**163 543 426**	1	1.534	**163 543 436**	1	1.534
2	50	10	1230	**163 543 427**	1	2.972	**163 543 437**	1	2.972

Size [inch]	D [mm]	H [mm]	H1 [mm]	H2 [mm]	L [mm]	L1 [mm]	L2 [mm]	L3 [mm]	L4 [mm]	L5 [mm]	L6 [mm]	M	z [mm]	z1 [mm]
⅜	50	79	28	8	123	87	73	36	25	42	45	6	85	42
½	50	79	28	8	122	87	73	36	25	42	45	6	77	38
¾	58	88	32	8	141	108	86	43	25	50	58	6	92	46
1	68	94	36	8	161	108	99	50	25	50	58	6	105	53
1 ¼	84	113	45	9	187	141	120	60	45	66	75	8	126	63
1 ½	97	119	51	9	213	141	137	69	45	66	75	8	143	72
2	124	141	65	9	261	165	179	89	45	78	87	8	185	92

PF 2 32 002 803

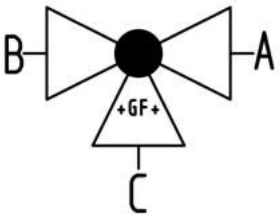

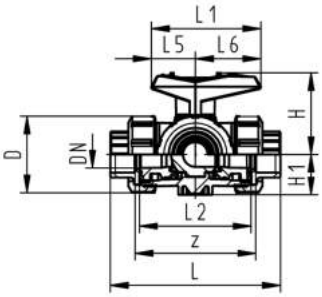

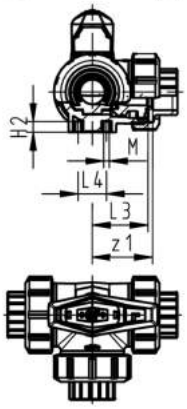

3-Way ball valve type 543 PVC-C Horizontal/L-port With solvent cement sockets ASTM

Model:

- For easy installation and removal (valve end and union nut are compatible with type 546)
- Ball seals PTFE
- Pneumatic or electric actuator available separately
- Angle of operation 360° without turn limiter
- Turn limiter 90° enclosed, in different positions usable as a clip-on ring
- Integrated stainless steel mounting inserts
- Delivery status A-C opened, see flow scheme

Size [inch]	DN [mm]	PN [bar]	kv-value (Δp=1 bar) [l/min]	EPDM Code	SP	Weight [kg]	FPM Code	SP	Weight [kg]
⅜	10	10	50	**163 543 081**	1	0.265	**163 543 091**	1	0.265
½	15	10	75	**163 543 082**	1	0.272	**163 543 092**	1	0.272
¾	20	10	150	**163 543 083**	1	0.391	**163 543 093**	1	0.391
1	25	10	280	**163 543 084**	1	0.598	**163 543 094**	1	0.598
1 ¼	32	10	480	**163 543 085**	1	1.018	**163 543 095**	1	1.018
1 ½	40	10	620	**163 543 086**	1	1.480	**163 543 096**	1	1.496
2	50	10	1230	**163 543 087**	1	2.938	**163 543 097**	1	2.938

Size [inch]	D [mm]	H [mm]	H1 [mm]	H2 [mm]	L [mm]	L1 [mm]	L2 [mm]	L3 [mm]	L4 [mm]	L5 [mm]	L6 [mm]	M	z [mm]	z1 [mm]
⅜	50	57	28	8	123	77	73	36	25	32	45	6	85	42
½	50	57	28	8	122	77	73	36	25	32	45	6	77	38
¾	58	67	32	8	141	97	86	43	25	39	58	6	92	46
1	68	73	36	8	161	97	99	50	25	39	58	6	105	53
1 ¼	84	90	45	9	187	128	120	60	45	54	74	8	126	63
1 ½	97	97	51	9	213	128	137	69	45	54	74	8	143	72
2	124	116	65	9	261	152	179	89	45	66	87	8	185	92

PF 2 32 002 803

Diaphragm valves new generation

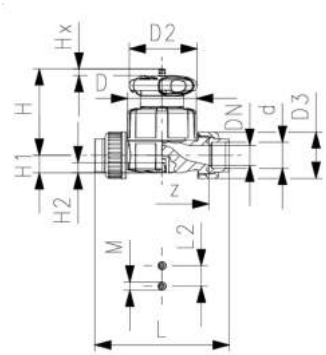

Diaphragm valve type 514 PVC-C
With solvent cement sockets metric

Model:

- Double flow rate compared to predecessor
- One housing nut replaces four screws
- Handwheel with built-in locking mechanism
- For easy installation and removal
- Short overall length

Option:

- Individual configuration of the valve (see diagram)
- Self adjusting multifunctional module with integrated limit switches

d [mm]	DN [mm]	PN [bar]	kv-value (Δp=1 bar) [l/min]	EPDM Code	SP	Weight [kg]	PTFE/EPDM Code	SP	Weight [kg]
20	15	10	125	**163 514 012**	1	0.409	**163 514 032**	1	0.312
25	20	10	271	**163 514 013**	1	0.448	**163 514 033**	1	0.558
32	25	10	481	**163 514 014**	1	0.707	**163 514 034**	1	1.207
40	32	10	759	**163 514 015**	1	1.516	**163 514 035**	1	1.536
50	40	10	1263	**163 514 016**	1	1.674	**163 514 036**	1	1.541
63	50	10	1728	**163 514 017**	1	2.568	**163 514 037**	1	3.622

d [mm]	D [mm]	D2 [mm]	D3 [mm]	H [mm]	H1 [mm]	H2 [mm]	L [mm]	L2 [mm]	M	z [mm]	Lift = Hx [mm]	closest inch [inch]
20	65	65	43	73	14	12	128	25	M6	96	7	½
25	80	65	51	81	18	12	152	25	M6	114	10	¾
32	88	87	58	107	22	12	166	25	M6	122	13	1
40	101	87	72	115	26	15	192	45	M8	140	15	1 ¼
50	117	135	83	148	32	15	222	45	M8	160	19	1 ½
63	144	135	100	166	39	15	266	45	M8	190	25	2

PF 2 31 158 064

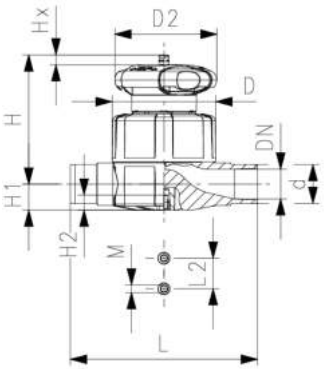

Diaphragm valve type 515 PVC-C
With solvent cement spigots metric

Model:

- Double flow rate compared to predecessor
- One housing nut replaces four screws
- Handwheel with built-in locking mechanism
- Overall length EN 558

Option:

- Individual configuration of the valve (see diagram)
- Self adjusting multifunctional module with integrated limit switches

d [mm]	DN [mm]	PN [bar]	kv-value (Δp=1 bar) [l/min]	EPDM Code	SP	Weight [kg]	PTFE/EPDM Code	SP	Weight [kg]
20	15	10	125	**163 515 012**	1	0.344	**163 515 032**	1	0.344
25	20	10	271	**163 515 013**	1	0.361	**163 515 033**	1	0.364
32	25	10	481	**163 515 014**	1	0.589	**163 515 034**	1	1.073
40	32	10	759	**163 515 015**	1	1.269	**163 515 035**	1	1.290
50	40	10	1263	**163 515 016**	1	2.314	**163 515 036**	1	2.343
63	50	10	1728	**163 515 017**	1	3.054	**163 515 037**	1	3.082

d [mm]	D [mm]	D2 [mm]	H [mm]	H1 [mm]	H2 [mm]	L [mm]	L2 [mm]	M	Lift = Hx [mm]	closest inch [inch]
20	65	65	73	14	12	124	25	M6	7	½
25	80	65	81	18	12	144	25	M6	10	¾
32	88	87	107	22	12	154	25	M6	13	1
40	101	87	115	26	15	174	45	M8	15	1 ¼
50	117	135	148	32	15	194	45	M8	19	1 ½
63	144	135	166	39	15	224	45	M8	25	2

PF 2 31 158 064

Diaphragm valve type 517 PVC-C
With backing flanges PP-V metric/BS

Model:

- Double flow rate compared to predecessor
- One housing nut replaces four screws
- Handwheel with built-in locking mechanism
- Flat sealing faces
- Overall length EN 558
- Connecting dimension: ISO 7005 PN 10, EN 1092 PN 10, DIN 2501 PN 10, BS 4504 PN 10

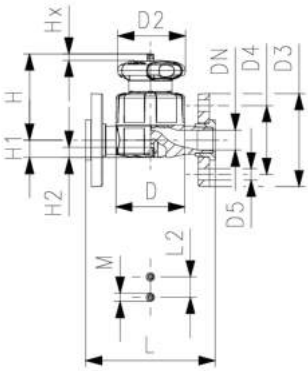

Option:

- Individual configuration of the valve (see diagram)
- Self adjusting multifunctional module with integrated limit switches

d [mm]	DN [mm]	PN [bar]	kv-value (Δp=1 bar) [l/min]	EPDM Code	SP	Weight [kg]	PTFE/EPDM Code	SP	Weight [kg]
20	15	10	125	**163 517 112**	1	0.447	**163 517 132**	1	0.528
25	20	10	271	**163 517 113**	1	0.695	**163 517 133**	1	0.695
32	25	10	481	**163 517 114**	1	1.388	**163 517 134**	1	0.952
40	32	10	759	**163 517 115**	1	1.797	**163 517 135**	1	1.818
50	40	10	1263	**163 517 116**	1	2.854	**163 517 136**	1	2.142
63	50	10	1728	**163 517 117**	1	3.318	**163 517 137**	1	3.115

d [mm]	D [mm]	D2 [mm]	D3 [mm]	D4 [mm]	D5 [mm]	H [mm]	H1 [mm]	H2 [mm]	L [mm]	L2 [mm]	M	Lift = Hx [mm]	closest inch [inch]
20	65	65	95	65	14	73	14	12	130	25	M6	7	½
25	80	65	105	75	14	81	18	12	150	25	M6	10	¾
32	88	87	115	85	14	107	22	12	160	25	M6	13	1
40	101	87	140	100	18	115	26	15	180	45	M8	15	1 ¼
50	117	135	150	110	18	148	32	15	200	45	M8	19	1 ½
63	144	135	165	125	18	166	39	15	230	45	M8	25	2

PF 2 31 158 064

Diaphragm valves

Diaphragm valve type 317 PVC-C
With flanges PP-V

Model:

- Flat sealing faces
- DN 15-65 with backing flange
- DN 80-150 with fixed flange
- Overall length according to EN 558

Option:

- Handwheel lockable DN15-65 (basic version not lockable)

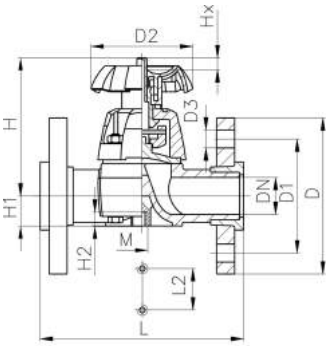

DN 15–65

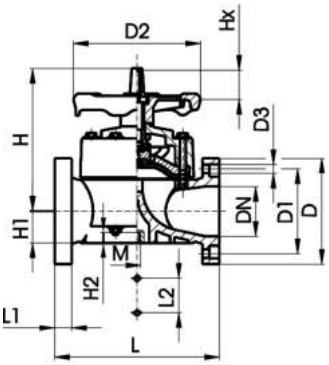

DN 80-100

PF 2 32 169 020

*** DN80 and DN150 fixed flanges metric and inch ANSI B16.5**

	d [mm]	Size [inch]	DN [mm]	PN [bar]	kv-value (Δp=1 bar) [l/min]	EPDM Code	PTFE/EPDM Code	SP	Weight [kg]
	75	2 ½	65	10	992	**163 317 523**	**163 317 538**	1	4.425
*	90	3	80	10	1700	**163 317 024**	**163 317 039**	1	9.822
	110	4	100	10	2700	**163 317 025**	**163 317 040**	1	13.799

	d [mm]	D [mm]	D1 [mm]	D2 [mm]	D3 [mm]	H [mm]	H1 [mm]	H2 [mm]	L [mm]	L1 [mm]	L2 [mm]	M	Lift = Hx [mm]	AL
	75	185	145	152	18	201	46	15	290		70	M8	30	4
*	90	200	160	270	18	265	57	23	310	35	120	M12	40	8
	110	225	180	270	18	304	69	23	350	35	120	M12	50	8

Butterfly valves

Butterfly valve type 567 PVC-C
Bare shaft

Model:

- Overall length according to EN 558, ISO 5752
- Connecting dimension: ISO 7005 PN 10, EN 1092 PN 10, DIN 2501 PN 10, ANSI/ ASME B 16.5 Class 150, BS 1560: 1989, BS 4504, JIS B 2220
- Interface F07 according to DIN/ISO 5211

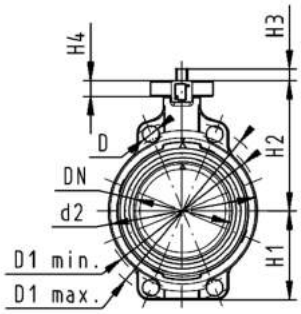

d [mm]	Size [inch]	DN [mm]	PN [bar]	kv-value (Δp=1 bar) [l/min]	EPDM Code	SP	Weight [kg]	FPM Code	SP	Weight [kg]
63	2	50	10	1470	**163 567 802**	1	0.831	**163 567 822**	1	0.835
75	2 ½	65	10	2200	**163 567 803**	1	0.947	**163 567 823**	1	0.952
90	3	80	10	3000	**163 567 804**	1	1.079	**163 567 824**	1	1.097
110	4	100	10	6500	**163 567 805**	1	1.759	**163 567 825**	1	1.737
140	5	125	10	11500	**163 567 806**	1	2.361	**163 567 826**	1	2.379
160	6	150	10	16600	**163 567 807**	1	3.289	**163 567 827**	1	3.364
225	8	200	10	39600	**163 567 808**	1	5.269	**163 567 828**	1	5.094

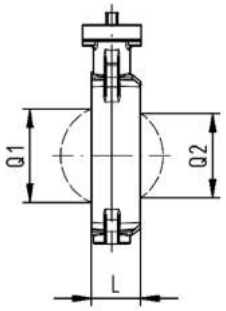

d [mm]	PTFE Code
63	**163 567 832**
75	**163 567 833**
90	**163 567 834**
110	**163 567 835**
140	**163 567 836**
160	**163 567 837**
225	**163 567 838**

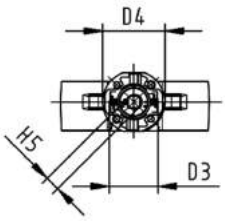

d [mm]	d2 [mm]	D [mm]	D1 min. [mm]	D1 max. [mm]	D3 [mm]	D4 [mm]	H [mm]	H1 [mm]	H2 [mm]	H3 [mm]	H4 [mm]	H5 [mm]	L [mm]	Q1 [mm]
63	104	19	120	125	70	90	222	77	134	27	23	11	45	40
75	115	19	140	145	70	90	235	83	140	27	23	11	46	54
90	131	19	150	160	70	90	247	89	146	27	23	11	49	67
110	161	19	175	191	70	90	287	104	167	16	23	14	56	88
140	187	23	210	216	70	90	313	117	181	16	23	14	64	113
160	215	24	241	241	70	90	335	130	189	19	23	17	72	139
225	267	23	290	295	70	90	387	158	210	19	23	17	73	178

d [mm]	Q2 [mm]
63	
75	35
90	50
110	74
140	97
160	123
225	169

PF 2 32 693 998

Butterfly valve type 567 PVC-C
Hand lever with ratchet settings

Model:

- Overall length according to EN 558, ISO 5752
- Connecting dimension: ISO 7005 PN 10, EN 1092 PN 10, DIN 2501 PN 10, ANSI/ ASME B 16.5 Class 150, BS 1560: 1989, BS 4504, JIS B 2220

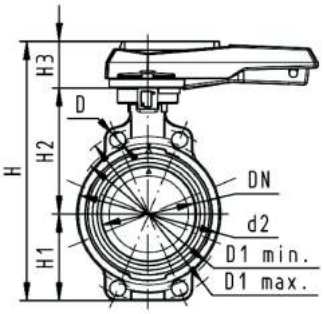

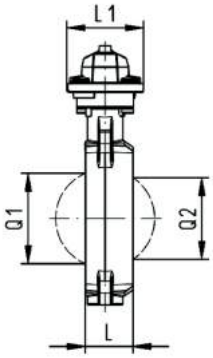

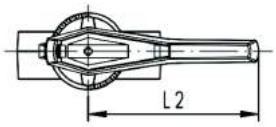

d [mm]	Size [inch]	DN [mm]	PN [bar]	kv-value (Δp=1 bar) [l/min]	EPDM Code	SP	Weight [kg]	FPM Code	SP	Weight [kg]
63	2	50	10	1470	**163 567 002**	1	1.257	**163 567 022**	1	1.268
75	2 ½	65	10	2200	**163 567 003**	1	1.366	**163 567 023**	1	1.174
90	3	80	10	3000	**163 567 004**	1	1.542	**163 567 024**	1	1.997
110	4	100	10	6500	**163 567 005**	1	2.231	**163 567 025**	1	2.715
140	5	125	10	11500	**163 567 006**	1	2.820	**163 567 026**	1	2.536
160	6	150	10	16600	**163 567 007**	1	6.719	**163 567 027**	1	3.361
225	8	200	10	39600	**163 567 008**	1	5.873	**163 567 028**	1	6.803

d [mm]	PTFE Code
63	**163 567 202**
75	**163 567 203**
90	**163 567 204**
110	**163 567 205**
140	**163 567 206**
160	**163 567 207**
225	**163 567 208**

d [mm]	d2 [mm]	D [mm]	D1 min. [mm]	D1 max. [mm]	H [mm]	H1 [mm]	H2 [mm]	H3 [mm]	L [mm]	L1 [mm]	L2 [mm]	Q1 [mm]	Q2 [mm]
63	104	19	120	125	264	77	134	54	45	106	205	40	
75	115	19	140	145	277	83	140	54	46	106	205	54	35
90	131	19	150	160	289	89	146	54	49	106	205	67	50
110	161	19	175	191	325	104	167	55	56	106	255	88	74
140	187	23	210	216	352	117	181	55	64	106	255	113	97
160	215	24	241	241	373	130	189	55	72	106	255	139	123
225	267	23	290	295	435	158	210	67	73	140	408	178	169

PF 2 32 693 001

Butterfly valve type 567 PVC-C
Reduction gear with handwheel

Model:

- Overall length according to EN 558, ISO 5752
- Connecting dimension: ISO 7005 PN 10, EN 1092 PN 10, DIN 2501 PN 10, ANSI/ ASME B 16.5 Class 150, BS 1560: 1989, BS 4504, JIS B 2220

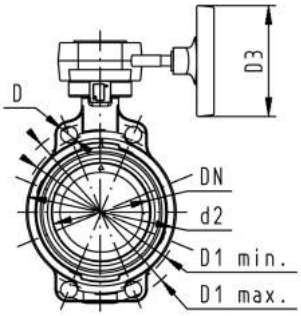

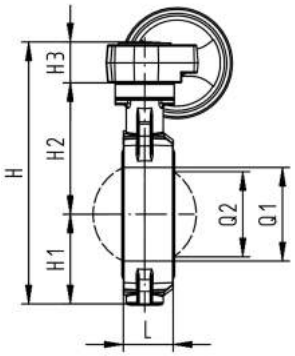

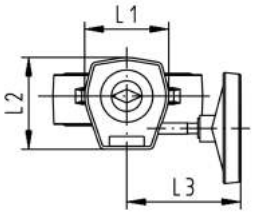

d [mm]	Size [inch]	DN [mm]	PN [bar]	kv-value (Δp=1 bar) [l/min]	EPDM Code	SP	Weight [kg]	FPM Code	SP	Weight [kg]
63	2	50	10	1470	**163 567 042**	1	3.078	**163 567 062**	1	3.078
75	2 ½	65	10	2200	**163 567 043**	1	3.201	**163 567 063**	1	3.212
90	3	80	10	3000	**163 567 044**	1	3.384	**163 567 064**	1	3.391
110	4	100	10	6500	**163 567 045**	1	4.019	**163 567 065**	1	4.033
140	5	125	10	11500	**163 567 046**	1	4.526	**163 567 066**	1	4.526
160	6	150	10	16600	**163 567 047**	1	5.601	**163 567 067**	1	5.624
225	8	200	10	39600	**163 567 048**	1	7.326	**163 567 068**	1	7.354

d [mm]	PTFE Code
63	**163 567 242**
75	**163 567 243**
90	**163 567 244**
110	**163 567 245**
140	**163 567 246**
160	**163 567 247**
225	**163 567 248**

d [mm]	d2 [mm]	D [mm]	D1 min. [mm]	D1 max. [mm]	D3 [mm]	H [mm]	H1 [mm]	H2 [mm]	H3 [mm]	L [mm]	L1 [mm]	L2 [mm]	L3 [mm]	Q1 [mm]
63	104	19	120	125	150	278	77	134	50	45	110	120	155	40
75	115	19	140	145	150	291	83	140	50	46	110	120	155	54
90	131	19	150	160	150	303	89	146	50	49	110	120	155	67
110	160	19	175	191	150	339	104	167	50	56	110	120	155	88
140	187	23	210	216	150	365	117	181	50	64	110	120	155	113
160	215	24	241	241	150	387	130	189	50	72	110	120	155	139
225	267	23	290	295	150	436	158	210	50	73	110	120	155	178

d [mm]	Q2 [mm]
63	
75	35
90	50
110	74
140	97
160	123
225	169

PF 2 32 693 001

Lugstyle butterfly valve type 568 PVC-C
Bare shaft

Model:

- Outer body in GGG-40.3 epoxy-coated
- Overall length according to EN 558, ISO 5752
- Connecting dimension: ISO 7005 PN10, EN 1092 PN10, DIN 2501 PN10
- Interface F07 according to DIN/ISO 5211

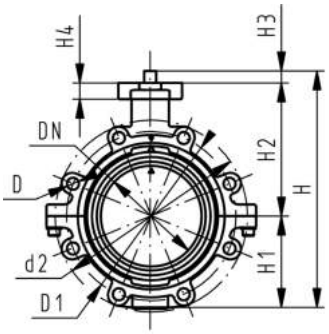

d [mm]	Size [inch]	DN [mm]	PN [bar]	kv-value (Δp=1 bar) [l/min]	EPDM Code	SP	Weight [kg]	FPM Code	SP	Weight [kg]
63	2	50	10	1470	**163 568 802**	1	2.921	**163 568 822**	1	2.921
75	2 ½	65	10	2200	**163 568 803**	1	3.288	**163 568 823**	1	3.288
90	3	80	10	3000	**163 568 804**	1	4.342	**163 568 824**	1	4.342
110	4	100	10	6500	**163 568 805**	1	5.857	**163 568 825**	1	5.857
140	5	125	10	11500	**163 568 806**	1	7.845	**163 568 826**	1	7.845
160	6	150	10	16600	**163 568 807**	1	9.824	**163 568 827**	1	9.824
225	8	200	10	39600	**163 568 808**	1	15.042	**163 568 828**	1	15.042

d [mm]	PTFE Code
63	**163 568 832**
75	**163 568 833**
90	**163 568 834**
110	**163 568 835**
140	**163 568 836**
160	**163 568 837**
225	**163 568 838**

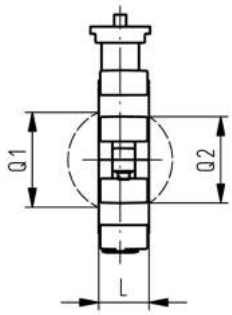

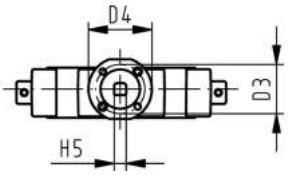

d [mm]	d2 [mm]	D	D1 [mm]	D3 [mm]	D4 [mm]	H [mm]	H1 [mm]	H2 [mm]	H3 [mm]	H4 [mm]	L [mm]	Q1 [mm]	Q2 [mm]
63	150	M16	125	70	90	238	77	134	27	23	45	40	
75	170	M16	145	70	90	250	83	140	27	23	46	54	35
90	184	M16	160	70	90	262	89	146	27	23	49	67	50
110	216	M16	180	70	90	287	104	167	16	23	56	88	74
140	246	M16	210	70	90	314	117	181	16	23	64	113	97
160	273	M20	240	70	90	338	130	189	19	23	72	139	123
225	334	M20	295	70	90	387	158	210	19	23	73	178	169

PF 2 32 694 998

Lugstyle butterfly valve type 568 PVC-C
Hand lever with ratchet settings

Model:

- Outer body in GGG-40.3 epoxy-coated
- Overall length according to EN 558, ISO 5752
- Connecting dimension: ISO 7005 PN10, EN 1092 PN10, DIN 2501 PN10

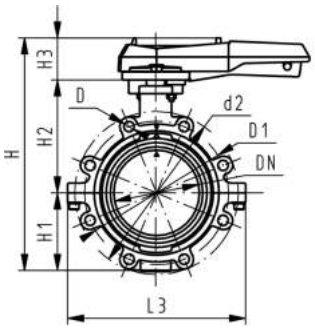

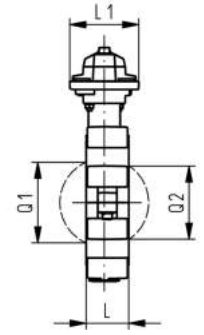

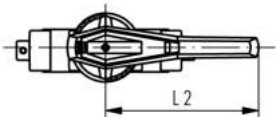

PF 2 32 694 001

d [mm]	Size [inch]	DN [mm]	PN [bar]	kv-value (Δp=1 bar) [l/min]	EPDM Code	SP	Weight [kg]	FPM Code	SP	Weight [kg]
63	2	50	10	1470	**163 568 002**	1	3.143	**163 568 022**	1	3.143
75	2 ½	65	10	2200	**163 568 003**	1	3.510	**163 568 023**	1	3.510
90	3	80	10	3000	**163 568 004**	1	4.564	**163 568 024**	1	4.564
110	4	100	10	6500	**163 568 005**	1	6.127	**163 568 025**	1	6.127
140	5	125	10	11500	**163 568 006**	1	8.115	**163 568 026**	1	8.115
160	6	150	10	16600	**163 568 007**	1	10.094	**163 568 027**	1	10.094
225	8	200	10	39600	**163 568 008**	1	15.849	**163 568 028**	1	15.849

d [mm]	PTFE Code
63	**163 568 202**
75	**163 568 203**
90	**163 568 204**
110	**163 568 205**
140	**163 568 206**
160	**163 568 207**
225	**163 568 208**

d [mm]	d2 [mm]	D	D1 [mm]	H [mm]	H1 [mm]	H2 [mm]	H3 [mm]	L [mm]	L1 [mm]	L2 [mm]	L3 [mm]	Q1 [mm]	Q2 [mm]
63	150	M16	125	265	77	134	54	45	106	205	150	40	
75	170	M16	145	277	83	140	54	46	106	205	160	54	35
90	184	M16	160	289	89	146	54	49	106	205	205	67	50
110	216	M16	180	326	104	167	55	56	106	255	244	88	74
140	246	M16	210	353	117	181	55	64	106	255	272	113	97
160	273	M20	240	374	130	189	55	72	106	255	297	139	123
225	334	M20	295	435	158	210	67	73	140	408	360	178	169

Lugstyle butterfly valve type 568 PVC-C
Reduction gear with handwheel

Model:

- Outer body in GGG-40.3 epoxy-coated
- Overall length according to EN 558, ISO 5752
- Connecting dimension: ISO 7005 PN10, EN 1092 PN10, DIN 2501 PN10

d [mm]	Size [inch]	DN [mm]	PN [bar]	kv-value (Δp=1 bar) [l/min]	EPDM Code	SP	Weight [kg]	FPM Code	SP	Weight [kg]
63	2	50	10	1470	**163 568 042**	0	5.181	**163 568 062**	0	5.181
75	2 ½	65	10	2200	**163 568 043**	0	5.548	**163 568 063**	0	5.548
90	3	80	10	3000	**163 568 044**	0	6.602	**163 568 064**	0	6.602
110	4	100	10	6500	**163 568 045**	0	8.117	**163 568 065**	0	8.117
140	5	125	10	11500	**163 568 046**	0	10.105	**163 568 066**	0	10.105
160	6	150	10	16600	**163 568 047**	1	12.084	**163 568 067**	1	12.084
225	8	200	10	39600	**163 568 048**	1	17.302	**163 568 068**	1	17.302

d [mm]	PTFE Code
63	**163 568 242**
75	**163 568 243**
90	**163 568 244**
110	**163 568 245**
140	**163 568 246**
160	**163 568 247**
225	**163 568 248**

d [mm]	d2 [mm]	D	D1 [mm]	D3 [mm]	H [mm]	H1 [mm]	H2 [mm]	H3 [mm]	L [mm]	L1 [mm]	L2 [mm]	L3 [mm]	L4 [mm]	Q1 [mm]	Q2 [mm]
63	150	M16	125	150	279	77	134	50	45	110	120	155	150	40	
75	170	M16	145	150	291	83	140	50	46	110	120	155	160	54	35
90	184	M16	160	150	303	89	146	50	49	110	120	155	205	67	50
110	216	M16	180	150	339	104	167	50	56	110	120	155	244	88	74
140	246	M16	210	150	366	117	181	50	64	110	120	155	272	113	97
160	273	M20	240	150	387	130	189	50	72	110	120	155	297	139	123
225	334	M20	295	150	436	158	210	50	73	110	120	155	360	178	169

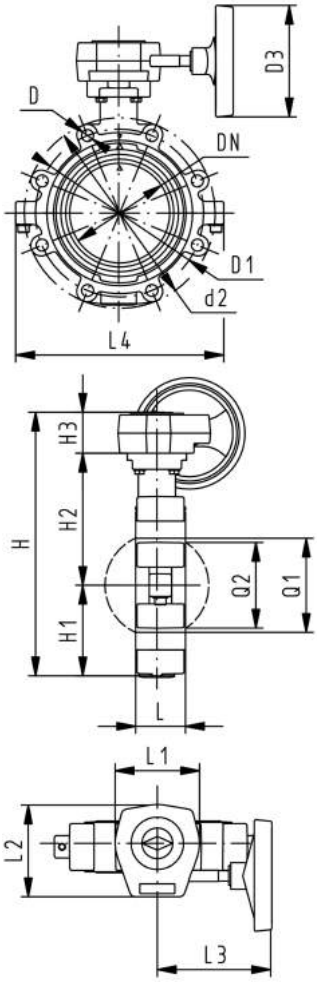

PF 2 32 694 001

Cone check valves

Check valve type 561 PVC-C
With solvent cement sockets metric

Model:

- Sealing at a minimum water column of 2 m
- Designed for easy installation and removal
- Vibration free even at high flow velocity
- Flow-optimized return cone, double guided
- For vertical installation
- Compact installation length, same as ball valve type 546
- Z-length, end connectors and union nuts **not** compatible with type 360
- New DN56-DN100

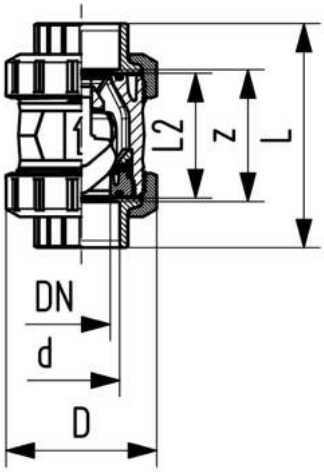

d [mm]	DN [mm]	PN [bar]	kv-value (Δp=1 bar) [l/min]	EPDM Code	SP	Weight [kg]	FPM Code	SP	Weight [kg]
16	10	16	190	**163 561 001**	1	0.120	**163 561 011**	1	0.120
20	15	16	180	**163 561 002**	1	0.120	**163 561 012**	1	0.120
25	20	16	380	**163 561 003**	1	0.260	**163 561 013**	1	0.280
32	25	16	460	**163 561 004**	1	0.280	**163 561 014**	1	0.280
40	32	16	850	**163 561 005**	1	0.490	**163 561 015**	1	0.490
50	40	16	1080	**163 561 006**	1	0.710	**163 561 016**	1	0.710
63	50	16	1670	**163 561 007**	1	1.456	**163 561 017**	1	1.470
75	65	16	2950	**163 561 008**	1	3.460	**163 561 018**	1	3.480
90	80	16	3600	**163 561 009**	1	5.540	**163 561 019**	1	5.570
110	100	16	4150	**163 561 010**	1	8.930	**163 561 020**	1	8.970

d [mm]	D [mm]	L [mm]	L2 [mm]	z [mm]	closest inch [inch]
16	50	92	56	64	⅜
20	50	95	56	64	½
25	58	110	65	72	¾
32	68	123	71	79	1
40	84	146	85	94	1 ¼
50	97	157	89	95	1 ½
63	124	183	101	107	2
75	166	233	136	144	2 ½
90	200	254	141	151	3
110	238	301	164	174	4

PF 2 31 161 012

Check valve type 561 PVC-C
With threaded sockets Rp

Model:

- Sealing at a minimum water column of 2 m
- Designed for easy installation and removal
- Vibration free even at high flow velocity
- Flow-optimized return cone, double guided
- For vertical installation
- Compact installation length, same as ball valve type 546
- Z-length, end connectors and union nuts **not** compatible with type 360
- New DN56-DN100

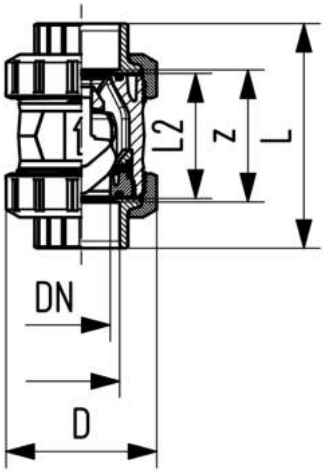

Rp [inch]	DN [mm]	PN [bar]	kv-value (Δp=1 bar) [l/min]	EPDM Code	SP	Weight [kg]	FPM Code	SP	Weight [kg]
⅜	10	10	190	**163 561 021**	1	0.120	**163 561 031**	1	0.120
½	15	10	180	**163 561 022**	1	0.120	**163 561 032**	1	0.120
¾	20	10	380	**163 561 023**	1	0.260	**163 561 033**	1	0.280
1	25	10	460	**163 561 024**	1	0.290	**163 561 034**	1	0.290
1 ¼	32	10	850	**163 561 025**	1	0.490	**163 561 035**	1	0.500
1 ½	40	10	1080	**163 561 026**	1	0.740	**163 561 036**	1	0.750
2	50	10	1670	**163 561 027**	1	1.530	**163 561 037**	1	1.530
2 ½	65	10	2950	**163 561 028**	1	3.530	**163 561 038**	1	3.550
3	80	10	3600	**163 561 029**	1	5.670	**163 561 039**	1	5.700
4	100	10	4150	**163 561 030**	1	8.990	**163 561 040**	1	9.030

Rp [inch]	D [mm]	L [mm]	L2 [mm]	z [mm]
⅜	50	95	56	69
½	50	100	56	67
¾	58	114	65	78
1	68	127	71	85
1 ¼	84	146	85	100
1 ½	97	152	89	106
2	124	177	101	121
2 ½	166	233	136	144
3	200	254	141	151
4	238	301	164	174

PF 2 31 161 012

Check valve type 562 PVC-C
With solvent cement sockets metric

Model:

- For horizontal or vertical installation
- Sealing at a minimum water column of 1 m
- Spring loaded, spring made of stainless steel (1.4310)
- Spring available in other materials, see spare parts
- Designed for easy installation and removal
- Vibration free even at high flow velocity
- Flow-optimized return cone, double guided
- Compact installation length, same as ball valve type 546
- Z-length, end connectors and union nuts **not** compatible with type 360
- New DN56-DN100

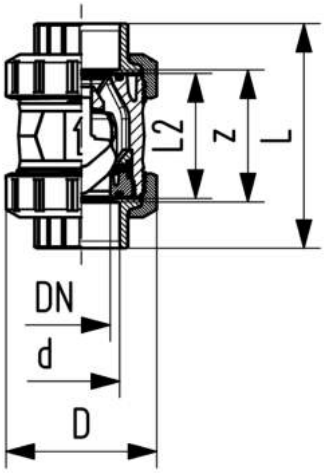

d [mm]	DN [mm]	PN [bar]	kv-value (Δp=1 bar) [l/min]	EPDM Code	SP	Weight [kg]	FPM Code	SP	Weight [kg]
16	10	16	190	**163 562 001**	1	0.120	**163 562 011**	1	0.120
20	15	16	180	**163 562 002**	1	0.120	**163 562 012**	1	0.120
25	20	16	380	**163 562 003**	1	0.260	**163 562 013**	1	0.280
32	25	16	460	**163 562 004**	1	0.280	**163 562 014**	1	0.280
40	32	16	850	**163 562 005**	1	0.490	**163 562 015**	1	0.490
50	40	16	1080	**163 562 006**	1	0.710	**163 562 016**	1	0.710
63	50	16	1670	**163 562 007**	1	1.460	**163 562 017**	1	1.470
75	65	16	2950	**163 562 008**	1	3.460	**163 562 018**	1	3.480
90	80	16	3600	**163 562 009**	1	5.540	**163 562 019**	1	5.570
110	100	16	4150	**163 562 010**	1	8.930	**163 562 020**	1	8.970

d [mm]	D [mm]	L [mm]	L2 [mm]	z [mm]	closest inch [inch]
16	50	92	56	64	⅜
20	50	95	56	64	½
25	58	110	65	72	¾
32	68	123	71	79	1
40	84	146	85	94	1 ¼
50	97	157	89	95	1 ½
63	124	183	101	107	2
75	166	233	136	144	2 ½
90	200	254	141	151	3
110	238	301	164	174	4

PF 2 31 161 012

Check valve type 562 PVC-C
With threaded sockets Rp

Model:

- For horizontal or vertical installation
- Sealing at a minimum water column of 1 m
- Spring loaded, spring made of stainless steel (1.4310)
- Spring available in other materials, see spare parts
- Designed for easy installation and removal
- Vibration free even at high flow velocity
- Flow-optimized return cone, double guided
- Compact installation length, same as ball valve type 546
- Z-length, end connectors and union nuts **not** compatible with type 360
- New DN56-DN100

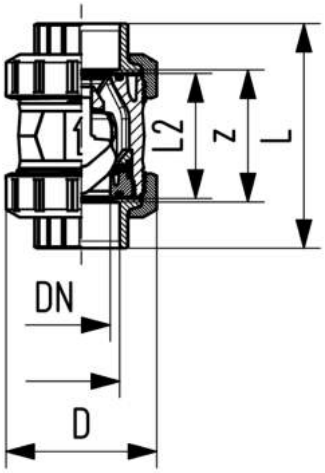

Rp [inch]	DN [mm]	PN [bar]	kv-value (Δp=1 bar) [l/min]	EPDM Code	SP	Weight [kg]	FPM Code	SP	Weight [kg]
⅜	10	10	190	**163 562 021**	1	0.120	**163 562 031**	1	0.120
½	15	10	180	**163 562 022**	1	0.120	**163 562 032**	1	0.120
¾	20	10	380	**163 562 023**	1	0.260	**163 562 033**	1	0.280
1	25	10	460	**163 562 024**	1	0.290	**163 562 034**	1	0.290
1 ¼	32	10	850	**163 562 025**	1	0.490	**163 562 035**	1	0.500
1 ½	40	10	1080	**163 562 026**	1	0.740	**163 562 036**	1	0.750
2	50	10	1670	**163 562 027**	1	1.530	**163 562 037**	1	1.530
2 ½	65	10	2950	**163 562 028**	1	3.530	**163 562 038**	1	3.550
3	80	10	3600	**163 562 029**	1	5.670	**163 562 039**	1	5.700
4	100	10	4150	**163 562 030**	1	8.990	**163 562 040**	1	9.030

Rp [inch]	D [mm]	L [mm]	L2 [mm]	z [mm]
⅜	50	95	56	69
½	50	100	56	67
¾	58	114	65	78
1	68	127	71	85
1 ¼	84	146	85	100
1 ½	97	152	89	106
2	124	177	101	121
2 ½	166	233	136	144
3	200	254	141	151
4	238	301	164	174

PF 2 31 161 012

Process control valves

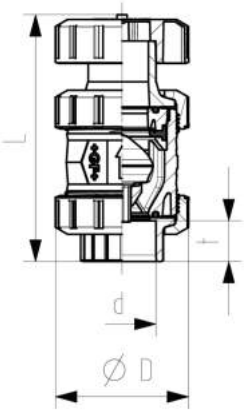

PF 2 31 161 012

Ventilating and bleed valve
Type 591 PVC-C
With solvent cement sockets metric

Model:

- With protection cap up to DN50 made of PP-GF, DN65-100 made of POM
- Floater made of PP-H
- Designed for easy installation and removal
- Compact installation length

d [mm]	DN [mm]	PN [bar]	EPDM Code	FPM Code	D [mm]	L [mm]	t [mm]	closest inch [inch]
16	10	16	**163 591 001**	**163 591 011**	50	118	14	⅜
20	15	16	**163 591 002**	**163 591 012**	50	124	16	½
25	20	16	**163 591 003**	**163 591 013**	58	142	19	¾
32	25	16	**163 591 004**	**163 591 014**	68	157	22	1
40	32	16	**163 591 005**	**163 591 015**	84	179	26	1 ¼
50	40	16	**163 591 006**	**163 591 016**	97	197	31	1 ½
63	50	16	**163 591 007**	**163 591 017**	124	229	38	2
75	65	16	**163 591 008**	**163 591 018**	166	258	45	2 ½
90	80	16	**163 591 009**	**163 591 019**	200	277	52	3
110	100	16	**163 591 010**	**163 591 020**	238	320	64	4

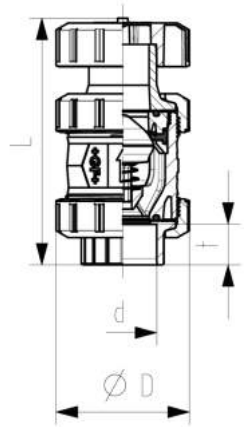

PF 2 31 161 012

Ventilating valve type 595 PVC-C
With solvent cement sockets metric

Model:

- With protection cap up to DN50 made of PP-GF, DN65-100 made of POM
- Spring loaded, spring made of NIMONIC 90, HALAR coated
- Spring available in other materials, see spare parts
- Designed for easy installation and removal
- Compact installation length

d [mm]	DN [mm]	PN [bar]	EPDM Code	FPM Code	D [mm]	L [mm]	t [mm]	closest inch [inch]
16	10	16	**163 595 001**	**163 595 011**	50	118	14	⅜
20	15	16	**163 595 002**	**163 595 012**	50	124	16	½
25	20	16	**163 595 003**	**163 595 013**	58	142	19	¾
32	25	16	**163 595 004**	**163 595 014**	68	157	22	1
40	32	16	**163 595 005**	**163 595 015**	84	179	26	1 ¼
50	40	16	**163 595 006**	**163 595 016**	97	197	31	1 ½
63	50	16	**163 595 007**	**163 595 017**	124	229	38	2
75	65	16	**163 595 008**	**163 595 018**	166	258	45	2 ½
90	80	16	**163 595 009**	**163 595 019**	200	277	52	3
110	100	16	**163 595 010**	**163 595 020**	238	320	64	4

Pressure regulating valves

Pressure reducing valve type 582 PVC-C
With solvent cement spigots metric
Without manometer

Model:

- Diaphragm PTFE/EPDM
- Integrated stainless steel mounting inserts
- 0.5-9.0 bar (7-130 psi)

0.3-3.0 bar (4-44 psi) on request
Manometer on request

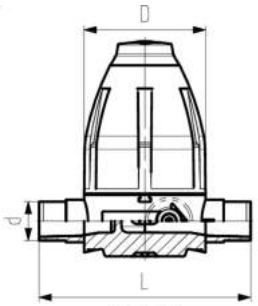

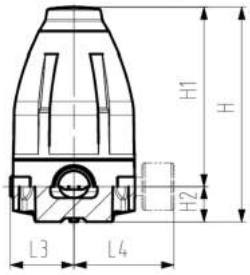

d [mm]	DN [mm]	PN [bar]	O-rings EPDM Code	O-rings FPM Code
16	10	10	**163 582 001**	**163 582 011**
20	15	10	**163 582 002**	**163 582 012**
25	20	10	**163 582 003**	**163 582 013**
32	25	10	**163 582 004**	**163 582 014**
40	32	10	**163 582 005**	**163 582 015**
50	40	10	**163 582 006**	**163 582 016**
63	50	10	**163 582 007**	**163 582 017**

d [mm]	D [mm]	H [mm]	H1 [mm]	H2 [mm]	H3 [mm]	L [mm]	L3 [mm]	L5 [mm]	M	closest inch [inch]
16	79	132	111	21	12	134	42	40	M6	⅜
20	79	132	111	21	12	134	42	40	M6	½
25	100	177	148	29	14	174	53	46	M6	¾
32	100	177	148	29	14	174	53	46	M6	1
40	147	251	207	44	21	224	76	65	M8	1 ¼
50	147	251	207	44	21	224	76	65	M8	1 ½
63	147	251	207	44	21	244	76	65	M8	2

Pressure reducing valve type 582 PVC-C
With solvent cement spigots metric
With manometer

Model:

- Diaphragm PTFE/EPDM
- Integrated stainless steel mounting inserts
- 0.5-9.0 bar (7-130 psi)
- Attention: Manometer with brass connection in direct contact with medium. Check for chemical resistance, otherwise chose the optional manometer adapter for media separation.

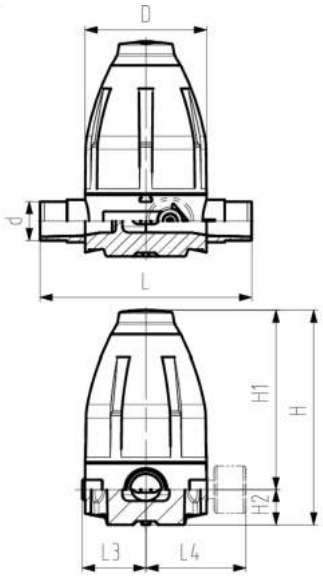

0.3-3.0 bar (4-44 psi) on request

d [mm]	DN [mm]	PN [bar]	O-rings EPDM Code	O-rings FPM Code
16	10	10	**163 582 021**	**163 582 031**
20	15	10	**163 582 022**	**163 582 032**
25	20	10	**163 582 023**	**163 582 033**
32	25	10	**163 582 024**	**163 582 034**
40	32	10	**163 582 025**	**163 582 035**
50	40	10	**163 582 026**	**163 582 036**
63	50	10	**163 582 027**	**163 582 037**

d [mm]	D [mm]	H [mm]	H1 [mm]	H2 [mm]	H3 [mm]	L [mm]	L3 [mm]	L4 [mm]	L5 [mm]	M	closest inch [inch]
16	79	132	111	21	12	134	42	77	40	M6	⅜
20	79	132	111	21	12	134	42	77	40	M6	½
25	100	177	148	29	14	174	53	88	46	M6	¾
32	100	177	148	29	14	174	53	88	46	M6	1
40	147	251	207	44	21	224	76	111	65	M8	1 ¼
50	147	251	207	44	21	224	76	111	65	M8	1 ½
63	147	251	207	44	21	244	76	111	65	M8	2

Pressure reducing valve type 582 PVC-C
Unions with solvent cement sockets metric
Without manometer

Model:

- Diaphragm PTFE/EPDM
- Integrated stainless steel mounting inserts
- 0.5-9.0 bar (7-130 psi)

0.3-3.0 bar (4-44 psi) on request
Manometer on request

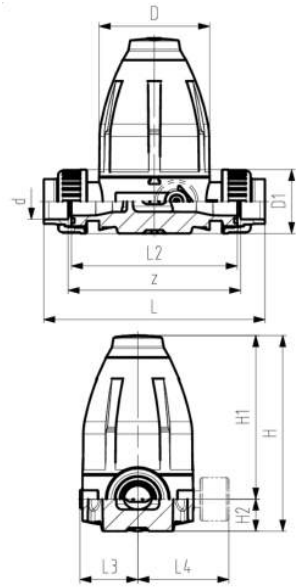

d [mm]	DN [mm]	PN [bar]	O-rings EPDM Code	O-rings FPM Code
20	15	10	**163 582 102**	**163 582 112**
25	20	10	**163 582 103**	**163 582 113**
32	25	10	**163 582 104**	**163 582 114**
40	32	10	**163 582 105**	**163 582 115**
50	40	10	**163 582 106**	**163 582 116**
63	50	10	**163 582 107**	**163 582 117**

d [mm]	D [mm]	D1 [mm]	H [mm]	H1 [mm]	H2 [mm]	H3 [mm]	L [mm]	L2 [mm]	L3 [mm]	L5 [mm]	M	z [mm]	closest inch [inch]
20	79	43	132	111	21	12	162	120	42	40	M6	126	½
25	100	51	177	148	29	14	198	150	53	46	M6	156	¾
32	100	58	177	148	29	14	204	150	53	46	M6	156	1
40	147	72	251	207	44	21	267	205	76	65	M8	211	1 ¼
50	147	83	251	207	44	21	273	205	76	65	M8	211	1 ½
63	147	100	251	207	44	21	287	205	76	65	M8	211	2

Pressure reducing valve type 582 PVC-C Unions with solvent cement sockets metric With manometer

Model:

- Diaphragm PTFE/EPDM
- Integrated stainless steel mounting inserts
- 0.5-9.0 bar (7-130 psi)
- Attention: Manometer with brass connection in direct contact with medium. Check for chemical resistance, otherwise chose the optional manometer adapter for media separation.

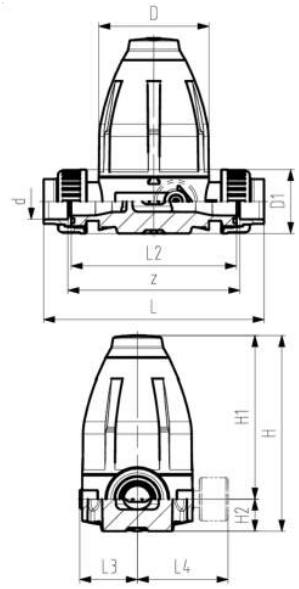

0.3-3.0 bar (4-44 psi) on request

d [mm]	DN [mm]	PN [bar]	O-rings EPDM Code	O-rings FPM Code
20	15	10	**163 582 122**	**163 582 132**
25	20	10	**163 582 123**	**163 582 133**
32	25	10	**163 582 124**	**163 582 134**
40	32	10	**163 582 125**	**163 582 135**
50	40	10	**163 582 126**	**163 582 136**
63	50	10	**163 582 127**	**163 582 137**

d [mm]	D [mm]	D1 [mm]	H [mm]	H1 [mm]	H2 [mm]	H3 [mm]	L [mm]	L2 [mm]	L3 [mm]	L4 [mm]	L5 [mm]	M	z [mm]
20	79	43	132	111	21	12	162	120	42	77	40	M6	126
25	100	51	177	148	29	14	198	150	53	88	46	M6	156
32	100	58	177	148	29	14	204	150	53	88	46	M6	156
40	147	72	251	207	44	21	267	205	76	111	65	M8	211
50	147	83	251	207	44	21	273	205	76	111	65	M8	211
63	147	100	251	207	44	21	287	205	76	111	65	M8	211

d [mm]	closest inch [inch]
20	½
25	¾
32	1
40	1 ¼
50	1 ½
63	2

Pressure retaining valve type 586 PVC-C
With solvent cement spigots metric
Without manometer

Model:

- Diaphragm PTFE/EPDM
- Integrated stainless steel mounting inserts
- 0.5-9.0 bar (7-130 psi)

0.3-3.0 bar (4-44 psi) on request
Manometer on request

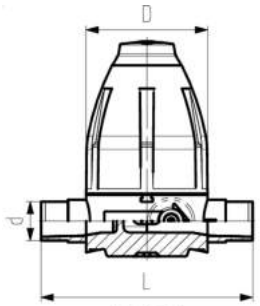

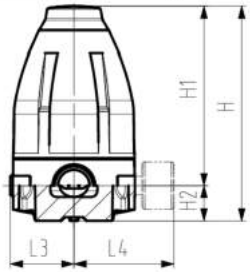

d [mm]	DN [mm]	PN [bar]	O-rings EPDM Code	O-rings FPM Code
16	10	10	**163 586 001**	**163 586 011**
20	15	10	**163 586 002**	**163 586 012**
25	20	10	**163 586 003**	**163 586 013**
32	25	10	**163 586 004**	**163 586 014**
40	32	10	**163 586 005**	**163 586 015**
50	40	10	**163 586 006**	**163 586 016**
63	50	10	**163 586 007**	**163 586 017**

d [mm]	D [mm]	H [mm]	H1 [mm]	H2 [mm]	H3 [mm]	L [mm]	L3 [mm]	L5 [mm]	M	closest inch [inch]
16	79	132	111	21	12	134	42	40	M6	⅜
20	79	132	111	21	12	134	42	40	M6	½
25	100	177	148	29	14	174	53	46	M6	¾
32	100	177	148	29	14	174	53	46	M6	1
40	147	251	207	44	21	224	76	65	M8	1 ¼
50	147	251	207	44	21	224	76	65	M8	1 ½
63	147	251	207	44	21	244	76	65	M8	2

Pressure retaining valve type 586 PVC-C
Unions with solvent cement sockets metric
Without manometer

Model:

- Diaphragm PTFE/EPDM
- Integrated stainless steel mounting inserts
- 0.5-9.0 bar (7-130 psi)

0.3-3.0 bar (4-44 psi) on request
Manometer on request

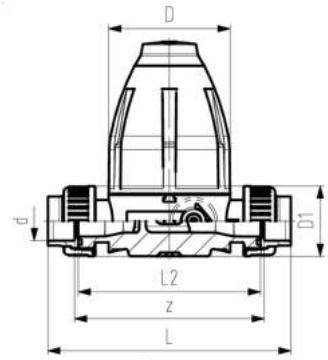

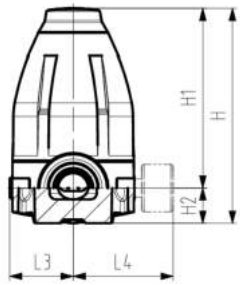

d [mm]	DN [mm]	PN [bar]	O-rings EPDM Code	O-rings FPM Code
20	15	10	**163 586 102**	**163 586 112**
25	20	10	**163 586 103**	**163 586 113**
32	25	10	**163 586 104**	**163 586 114**
40	32	10	**163 586 105**	**163 586 115**
50	40	10	**163 586 106**	**163 586 116**
63	50	10	**163 586 107**	**163 586 117**

d [mm]	D [mm]	D1 [mm]	H [mm]	H1 [mm]	H2 [mm]	H3 [mm]	L [mm]	L2 [mm]	L3 [mm]	L5 [mm]	M	z [mm]	closest inch [inch]
20	79	43	132	111	21	12	162	120	42	40	M6	126	½
25	100	51	177	148	29	14	198	150	53	46	M6	156	¾
32	100	58	177	148	29	14	204	150	53	46	M6	156	1
40	147	72	251	207	44	21	267	205	76	65	M8	211	1 ¼
50	147	83	251	207	44	21	273	205	76	65	M8	211	1 ½
63	147	100	251	207	44	21	287	205	76	65	M8	211	2

Strainers

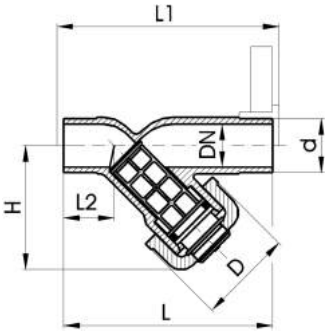

PF 2 32 200 004

Line strainer type 305 PVC-C
With solvent cement spigots metric

Model:

- Protects valves, pumps, etc. from becoming soiled
- Easy dismantling for cleaning the screens
- Overall length EN 558
- Cylindrical screen must be ordered separately

d [mm]	DN [mm]	PN [bar]	EPDM Code	SP	Weight [kg]	FPM Code	SP	Weight [kg]
20	15	10	**163 305 302**	1	0.110	**163 305 317**	1	0.120
25	20	10	**163 305 303**	1	0.160	**163 305 318**	1	0.160
32	25	10	**163 305 304**	1	0.250	**163 305 319**	1	0.250
40	32	10	**163 305 305**	1	0.380	**163 305 320**	1	0.640
50	40	10	**163 305 306**	1	0.640	**163 305 321**	1	0.640
63	50	10	**163 305 307**	1	1.072	**163 305 322**	1	1.076

d [mm]	D [mm]	H [mm]	L [mm]	L1 [mm]	L2 [mm]	closest inch [inch]
20	48	65	124	130	28	½
25	54	76	144	150	37	¾
32	62	90	154	160	37	1
40	71	104	174	180	44	1 ¼
50	88	124	194	200	48	1 ½
63	103	148	224	230	60	2

PF 2 32 200 999

Screen stainless steel
Screen perforation 0.5 mm

Model:

- Stainless Steel A4 Quality (AISI 316)

- For line strainers Type 305

d [mm]	DN [mm]	kv-value (Δp=1 bar) [l/min]	Code	D [mm]	L [mm]	closest inch [inch]
20	15	35	**161 486 100**	14	39	½
25	20	60	**161 486 101**	18	48	¾
32	25	85	**161 486 102**	24	60	1
40	32	130	**161 486 103**	30	71	1 ¼
50	40	200	**161 486 104**	38	87	1 ½
63	50	330	**161 486 105**	48	106	2
75	65	460	**161 486 106**	61	100	2 ½
90	80	665	**161 486 107**	73	118	3

Copiable

Configurator GF ball valve type 546 PVC-C

You will find a large selection of different versions in our range of products. New system elements also provide you with new opportunities for use. In order for us to supply exactly the ball valve you need for you application, we have created a selection menu for you.

We supply what you put together.

Ball valve
A01 Ball valve 546

Material
B02 PVC-C

Dimension
C05 DN 10 3/8“
C06 DN 15 1/2“
C07 DN 20 3/4“
C08 DN 25 1“
C09 DN 32 1 1/4“
C10 DN 40 1 1/2“
C11 DN 50 2“
C12 DN 65 2 1/2"
C13 DN 80 3"
C14 DN 100 4"

Version
D01 Standard, PTFE ball seal
D02 Oilfree, PTFE ball seal (only with specific connecting parts)
D03 Silicon-free, PTFE ball seal for inch ASTM (only with specific connecting parts)
D04 Silicon-free, PVDF ball seal for metric (only with specific connecting parts)

Seals
E01 EPDM seals
E02 FPM seals

Threaded inserts
F01 Without threaded inserts
F02 With threaded inserts

Connecting parts
G11 PVC-C Cement socket metric
G12 PVC-C Cement socket JIS
G13 PVC-C Cement socket inch ASTM
G14 PVC-C Cement spigot metric
G15 PVC-C Threaded socket Rp
G16 PVC-C Threaded socket Rp reinforced (DN10-50)
G17 PVC-C Threaded socket NPT
G40 PE-100 Butt fusion metric
G41 PE-100 Butt fusion spigot SDR11 metric
G42 PE-100 Butt fusion spigot SDR17.6 metric (DN65-100)
G43 PE-100 Butt fusion spigot long SDR11 metric
G72 Backing flange PP-steel metric
G73 Backing flange PP-steel inch ANSI
G81 PVC-C Valve end blank

Multi-functional module
I01 No multi-functional module
I02 Empty module
I03 Module with 2 limit switches Ag, Ni
I04 Module with 2 limit switches Au
I05 Module with 2 inductive switches Namur
I06 Module with 2 inductive switches PNP
I07 Module with 2 inductive switches NPN

Lever
K01 Standard handle red
K02 Standard handle black
K11 Multi-functional handle red

Mounting plate
L01 without mounting plate
L02 with mounting plate

A01	B02	C	D	E	F	G	G	I	K	L
						left	right			

Copiable

GF ball valve type 546 with electric actuator

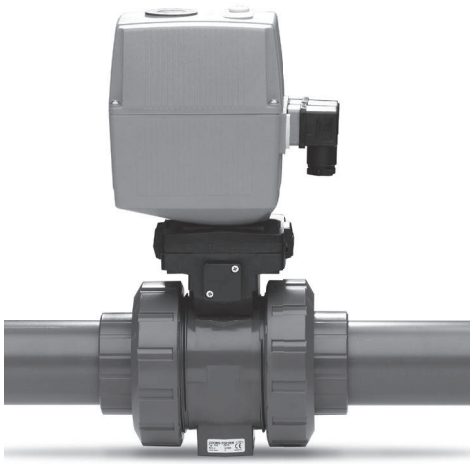

It's so easy to actuate the type 546:
With the configurator, you have a choice of new electric actuators, the EA11 for standard applications and the EA21 with modular design and accessories, for practically and type of operation.

We supply what you put together.

Electric Actuator EA11
T01 EA11 24 V
T02 EA11 100–230 V

Accessories EA11
U01 No accessories
U02 2 limit switches Ag, Ni
U03 Heating element
U04 Fail-safe return
U05 2 limit switches Ag, Ni normally open

Electric Actuator EA21/31
T03 EA21/31 24 V
T04 EA21/31 100–230 V

Accessories EA21
W01 No accessories
W02 Heating element
W03 Cycle time module
W04 Cycle time monitoring
W05 Cycles monitoring
W06 Motor current monitoring
W07 2 limit switches Ag, Ni
W08 2 limit switches Gold
W09 2 limit switches NPN
W10 2 limit switches PNP
W11 Positioner
W12 Electric position indicator
W14 Fail-safe return unit
W15 Switch intermediate position
W27 2 limit switches Ag, Ni normally open with connector
W31 Positioner PE25 with galv. separation

T	U	T	W	W	W	W	W	W

Ball valves electric

107

DN10/15 - 50

Ball valve type 107 PVC-C 100-230V
With manual emergency override
With solvent cement sockets metric

Model:

- Built on with electric actuator EA11
- Voltage 100-230 V, 50-60 Hz
- Control range 90°<)
- Control time 5 s/90°<)
- For easy installation and removal
- Integrated stainless steel mounting inserts

Option:

- Individual configuration of the valve (see diagram)

d [mm]	DN [mm]	PN [bar]	kv-value (Δp=1 bar) [l/min]	EPDM Code	SP	Weight [kg]	FPM Code	SP	Weight [kg]
16	10	10	70	**199 107 102**	1	1.770	**199 107 112**	1	1.770
20	15	10	185	**199 107 103**	1	1.780	**199 107 113**	1	1.780
25	20	10	350	**199 107 104**	1	1.860	**199 107 114**	1	1.860
32	25	10	700	**199 107 105**	1	1.950	**199 107 115**	1	1.950
40	32	10	1000	**199 107 106**	1	2.190	**199 107 116**	1	0.001
50	40	10	1600	**199 107 107**	1	2.360	**199 107 117**	1	2.360
63	50	10	3100	**199 107 108**	1	3.140	**199 107 118**	1	3.140

d [mm]	D [mm]	H [mm]	H1 [mm]	H2 [mm]	H3 [mm]	H5 [mm]	L [mm]	L1 [mm]	L2 [mm]	L4 [mm]	L5 [mm]	L6 [mm]	L7 [mm]	L8 [mm]	z [mm]
16	50	200	27	64	64	137	92	161	56	25	77	83	122	33	64
20	50	200	27	64	64	137	95	161	56	25	77	83	122	33	64
25	58	209	30	73	64	137	110	161	65	25	77	83	122	33	72
32	68	209	36	73	64	137	123	161	71	25	77	83	122	33	79
40	84	220	44	64	64	137	146	161	85	45	77	83	122	33	94
50	97	220	51	84	64	137	157	161	89	45	77	83	122	33	95
63	124	243	64	106	64	137	183	161	101	45	77	83	122	33	107

d [mm]	closest inch [inch]
16	⅜
20	½
25	¾
32	1
40	1 ¼
50	1 ½
63	2

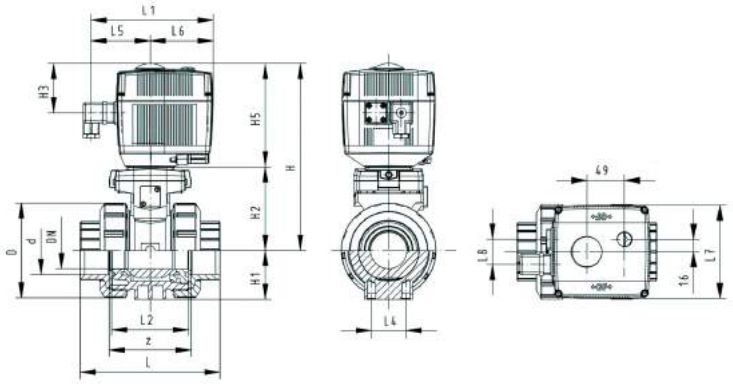

PF 3 39 695 032

DN10/15 - 50

Ball valve type 107 PVC-C 100-230V
With manual emergency override
With solvent cement spigots metric

Model:

- Built on with electric actuator EA11
- Voltage 100-230 V, 50-60 Hz
- Control range 90°<)
- Control time 5 s/90°<)
- For easy installation and removal
- Integrated stainless steel mounting inserts

Option:

- Individual configuration of the valve (see diagram)

d [mm]	DN [mm]	PN [bar]	kv-value (Δp=1 bar) [l/min]	EPDM Code	SP	Weight [kg]	FPM Code	SP	Weight [kg]
16	10	10	70	**199 107 122**	1	1.770	**199 107 132**	1	1.770
20	15	10	185	**199 107 123**	1	1.780	**199 107 133**	1	1.780
25	20	10	350	**199 107 124**	1	1.860	**199 107 134**	1	1.860
32	25	10	700	**199 107 125**	1	1.950	**199 107 135**	1	1.950
40	32	10	1000	**199 107 126**	1	2.641	**199 107 136**	1	2.190
50	40	10	1600	**199 107 127**	1	2.360	**199 107 137**	1	2.360
63	50	10	3100	**199 107 128**	1	3.140	**199 107 138**	1	3.140

d [mm]	D [mm]	H [mm]	H1 [mm]	H2 [mm]	H3 [mm]	H5 [mm]	L [mm]	L1 [mm]	L2 [mm]	L3 [mm]	L4 [mm]	L5 [mm]	L6 [mm]	L7 [mm]	L8 [mm]
16	50	200	27	64	64	137	114	161	56	130	25	77	83	122	33
20	50	200	27	64	64	137	124	161	56	130	25	77	83	122	33
25	58	209	30	73	64	137	144	161	65	150	25	77	83	122	33
32	68	209	36	73	64	137	154	161	71	160	25	77	83	122	33
40	84	220	44	84	64	137	174	161	85	180	45	77	83	122	33
50	97	220	51	84	64	137	194	161	89	200	45	77	83	122	33
63	124	243	64	106	64	137	224	161	101	230	45	77	83	122	33

d [mm]	closest inch [inch]
16	⅜
20	½
25	¾
32	1
40	1 ¼
50	1 ½
63	2

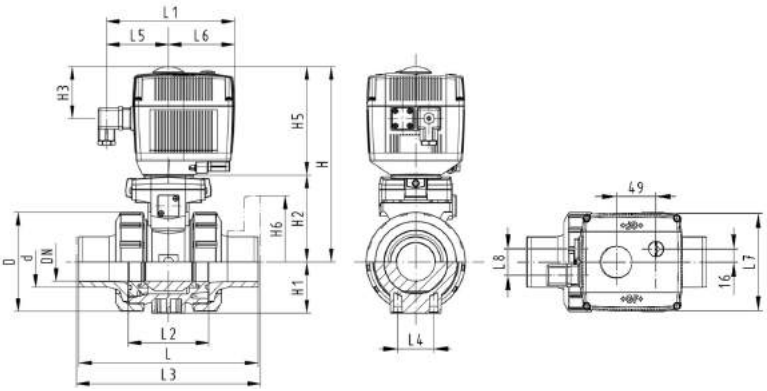

PF 3 39 695 032

DN10/15 - 50

Ball valve type 107 PVC-C 100-230V
With manual emergency override
With threaded sockets Rp

Model:

- Built on with electric actuator EA11
- Voltage 100-230 V, 50-60 Hz
- Control range 90°<)
- Control time 5 s/90°<)
- For easy installation and removal
- Integrated stainless steel mounting inserts

Option:

- Individual configuration of the valve (see diagram)

Rp [inch]	DN [mm]	PN [bar]	kv-value (Δp=1 bar) [l/min]	EPDM Code	SP	Weight [kg]	FPM Code	SP	Weight [kg]
⅜	10	10	70	**199 107 702**	1	2.100	**199 107 712**	1	2.100
½	15	10	185	**199 107 703**	1	2.100	**199 107 713**	1	2.100
¾	20	10	350	**199 107 704**	1	2.200	**199 107 714**	1	2.200
1	25	10	700	**199 107 705**	1	2.300	**199 107 715**	1	2.300
1 ¼	32	10	1000	**199 107 706**	1	2.600	**199 107 716**	1	2.600
1 ½	40	10	1600	**199 107 707**	1	3.000	**199 107 717**	1	3.000
2	50	10	3100	**199 107 708**	1	3.800	**199 107 718**	1	3.800

Rp [inch]	D [mm]	H [mm]	H1 [mm]	H2 [mm]	H3 [mm]	H5 [mm]	L [mm]	L1 [mm]	L2 [mm]	L4 [mm]	L5 [mm]	L6 [mm]	L7 [mm]	L8 [mm]	z [mm]
⅜	50	200	27	64	64	137	92	161	56	25	77	83	122	33	64
½	50	200	27	64	64	137	95	161	56	25	77	83	122	33	64
¾	58	209	30	73	64	137	110	161	65	25	77	83	122	33	72
1	68	209	36	73	64	137	123	161	71	25	77	83	122	33	79
1 ¼	84	220	44	84	64	137	146	161	85	45	77	83	122	33	94
1 ½	97	220	51	84	64	137	157	161	89	45	77	83	122	33	95
2	124	243	64	106	64	137	183	161	101	45	77	83	122	33	107

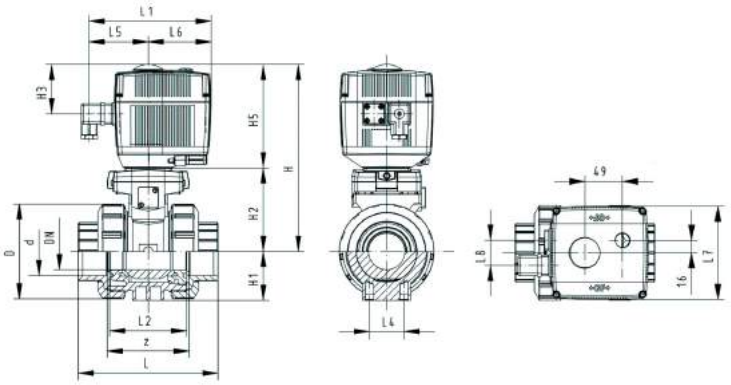

PF 3 39 695 032

DN10/15 - 50

Ball valve type 107 PVC-C 24V
With manual emergency override
With solvent cement sockets metric

Model:

- Built on with electric actuator EA11
- Voltage 24 V AC/DC
- Control range 90°<)
- Control time 5 s/90°<)
- For easy installation and removal
- Integrated stainless steel mounting inserts

Option:

- Individual configuration of the valve (see diagram)

d [mm]	DN [mm]	PN [bar]	kv-value (Δp=1 bar) [l/min]	EPDM Code	SP	Weight [kg]	FPM Code	SP	Weight [kg]
16	10	10	70	**199 107 142**	1	1.770	**199 107 152**	1	1.770
20	15	10	185	**199 107 143**	1	1.780	**199 107 153**	1	1.780
25	20	10	350	**199 107 144**	1	2.237	**199 107 154**	1	1.860
32	25	10	700	**199 107 145**	1	1.950	**199 107 155**	1	1.950
40	32	10	1000	**199 107 146**	1	2.190	**199 107 156**	1	2.190
50	40	10	1600	**199 107 147**	1	2.360	**199 107 157**	1	2.360
63	50	10	3100	**199 107 148**	1	3.665	**199 107 158**	1	3.140

d [mm]	D [mm]	H [mm]	H1 [mm]	H2 [mm]	H3 [mm]	H5 [mm]	L [mm]	L1 [mm]	L2 [mm]	L4 [mm]	L5 [mm]	L6 [mm]	L7 [mm]	L8 [mm]	z [mm]
16	50	200	27	64	64	137	92	161	56	25	77	83	122	33	64
20	50	200	27	64	64	137	95	161	56	25	77	83	122	33	64
25	58	209	30	73	64	137	110	161	65	25	77	83	122	33	72
32	68	209	36	73	64	137	123	161	71	25	77	83	122	33	79
40	84	220	44	84	64	137	146	161	85	45	77	83	122	33	94
50	97	220	51	84	64	137	157	161	89	45	77	83	122	33	95
63	124	243	64	106	64	137	183	161	101	45	77	83	122	33	107

d [mm]	closest inch [inch]
16	⅜
20	½
25	¾
32	1
40	1 ¼
50	1 ½
63	2

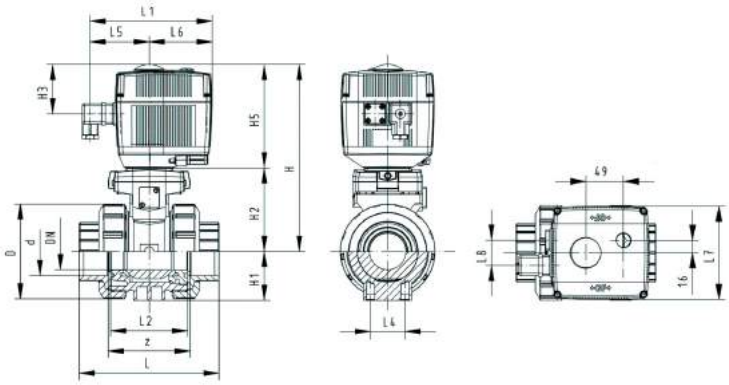

PF 3 39 695 032

DN10/15 - 50

Ball valve type 107 PVC-C 24V
With manual emergency override
With solvent cement spigots metric

Model:

- Built on with electric actuator EA11
- Voltage 24 V AC/DC
- Control range 90°<)
- Control time 5 s/90°<)
- For easy installation and removal
- Integrated stainless steel mounting inserts

Option:

- Individual configuration of the valve (see diagram)

d [mm]	DN [mm]	PN [bar]	kv-value (Δp=1 bar) [l/min]	EPDM Code	SP	Weight [kg]	FPM Code	SP	Weight [kg]
16	10	10	70	**199 107 162**	1	1.770	**199 107 172**	1	1.770
20	15	10	185	**199 107 163**	1	1.780	**199 107 173**	1	1.780
25	20	10	350	**199 107 164**	1	1.860	**199 107 174**	1	1.860
32	25	10	700	**199 107 165**	1	1.950	**199 107 175**	1	1.950
40	32	10	1000	**199 107 166**	1	2.190	**199 107 176**	1	2.190
50	40	10	1600	**199 107 167**	1	2.360	**199 107 177**	1	2.360
63	50	10	3100	**199 107 168**	1	3.140	**199 107 178**	1	3.140

d [mm]	D [mm]	H [mm]	H1 [mm]	H2 [mm]	H3 [mm]	H5 [mm]	L [mm]	L1 [mm]	L2 [mm]	L3 [mm]	L4 [mm]	L5 [mm]	L6 [mm]	L7 [mm]	L8 [mm]
16	50	200	27	64	64	137	114	161	56	130	25	77	83	122	33
20	50	200	27	64	64	137	124	161	56	130	25	77	83	122	33
25	58	209	30	73	64	137	144	161	65	150	25	77	83	122	33
32	68	209	36	73	64	137	154	161	71	160	25	77	83	122	33
40	84	220	44	84	64	137	174	161	85	180	45	77	83	122	33
50	97	220	51	84	64	137	194	161	89	200	45	77	83	122	33
63	124	243	64	106	64	137	224	161	101	230	45	77	83	122	33

d [mm]	closest inch [inch]
16	⅜
20	½
25	¾
32	1
40	1 ¼
50	1 ½
63	2

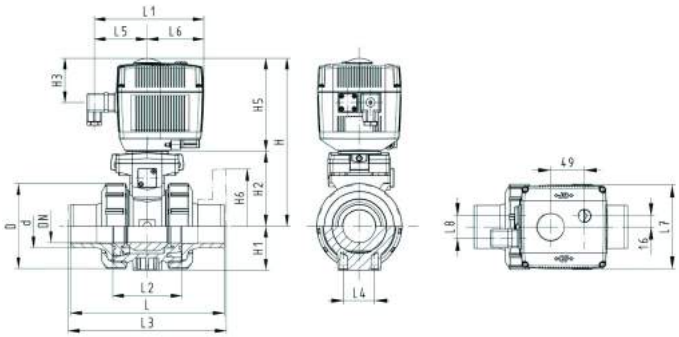

PF 3 39 695 032

DN10/15 - 50

Ball valve type 107 PVC-C 24V
With manual emergency override
With threaded sockets Rp

Model:

- Built on with electric actuator EA11
- Voltage 24 V AC/DC
- Control range 90°<)
- Control time 5 s/90°<)
- For easy installation and removal
- Integrated stainless steel mounting inserts

Option:

- Individual configuration of the valve (see diagram)

Rp [inch]	DN [mm]	PN [bar]	kv-value (Δp=1 bar) [l/min]	EPDM Code	SP	Weight [kg]	FPM Code	SP	Weight [kg]
⅜	10	10	70	**199 107 742**	1	2.100	**199 107 752**	1	2.100
½	15	10	185	**199 107 743**	1	2.100	**199 107 753**	1	2.100
¾	20	10	350	**199 107 744**	1	2.200	**199 107 754**	1	2.200
1	25	10	700	**199 107 745**	1	2.300	**199 107 755**	1	2.300
1 ¼	32	10	1000	**199 107 746**	1	2.600	**199 107 756**	1	2.600
1 ½	40	10	1600	**199 107 747**	1	3.000	**199 107 757**	1	3.000
2	50	10	3100	**199 107 748**	1	3.800	**199 107 758**	1	3.800

Rp [inch]	D [mm]	H [mm]	H1 [mm]	H2 [mm]	H3 [mm]	H5 [mm]	L [mm]	L1 [mm]	L2 [mm]	L4 [mm]	L5 [mm]	L6 [mm]	L7 [mm]	L8 [mm]	z [mm]
⅜	50	200	27	64	64	137	92	161	56	25	77	83	122	33	64
½	50	200	27	64	64	137	95	161	56	25	77	83	122	33	64
¾	58	209	30	73	64	137	110	161	65	25	77	83	122	33	72
1	68	209	36	73	64	137	123	161	71	25	77	83	122	33	79
1 ¼	84	220	44	84	64	137	146	161	85	45	77	83	122	33	94
1 ½	97	220	51	84	64	137	157	161	89	45	77	83	122	33	95
2	124	243	64	106	64	137	183	161	101	45	77	83	122	33	107

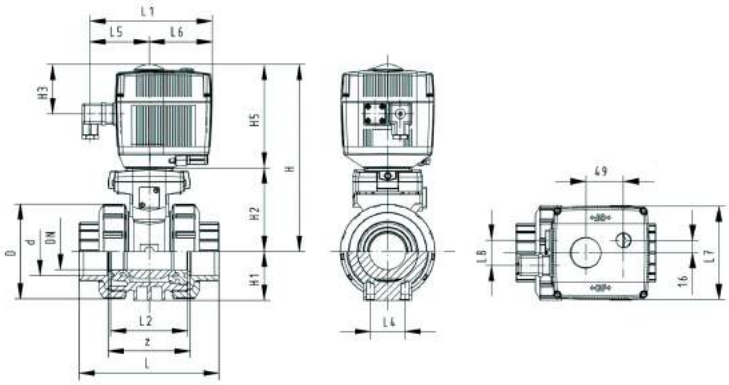

PF 3 39 695 032

DN10/15 - 50

130

Ball valve type 130 PVC-C 100-230V
With manual emergency override
With solvent cement sockets metric

Model:

- Voltage 100-230 V, 50-60 Hz
- Control range 90°<)
- Control time: EA21: 5s/90°<), EA31: 15s/90°<)
- Assignment of actuators: EA21 (DN10/15-50), EA31 (DN65-100)
- For easy installation and removal
- Integrated stainless steel mounting inserts

Option:

- Individual configuration of the valve (see diagram)

d [mm]	DN [mm]	PN [bar]	kv-value (Δp=1 bar) [l/min]	EPDM Code	SP	Weight [kg]	FPM Code	SP	Weight [kg]
16	10	10	70	**199 130 402**	1	2.100	**199 130 412**	1	2.100
20	15	10	185	**199 130 403**	1	2.100	**199 130 413**	1	2.100
25	20	10	350	**199 130 404**	1	2.200	**199 130 414**	1	2.200
32	25	10	700	**199 130 405**	1	2.300	**199 130 415**	1	2.695
40	32	10	1000	**199 130 406**	1	2.600	**199 130 416**	1	2.600
50	40	10	1600	**199 130 407**	1	3.000	**199 130 417**	1	3.213
63	50	10	3100	**199 130 408**	1	3.800	**199 130 418**	1	3.800
75	65	10	5000	**199 130 409**	1	7.700	**199 130 419**	1	7.700
90	80	10	7000	**199 130 410**	1	10.400	**199 130 420**	1	10.400
110	100	10	11000	**199 130 411**	1	15.100	**199 130 421**	1	15.100

d [mm]	D [mm]	H [mm]	H1 [mm]	H2 [mm]	H3 [mm]	H5 [mm]	L [mm]	L1 [mm]	L2 [mm]	L4 [mm]	L5 [mm]	L7 [mm]	z [mm]	closest inch [inch]
16	50	231	27	64	94	167	92	180	56	25	97	122	64	⅜
20	50	231	27	64	94	167	95	180	56	25	97	122	64	½
25	58	240	30	73	94	167	110	180	65	25	97	122	72	¾
32	68	240	36	73	94	167	123	180	71	25	97	122	79	1
40	84	251	44	84	94	167	146	180	85	45	97	122	94	1 ¼
50	97	251	51	84	94	167	157	180	89	45	97	122	95	1 ½
63	124	273	64	106	94	167	183	180	101	45	97	122	107	2
75	166	346	85	156	94	190	233	180	136	70	98	122	144	2 ½
90	200	358	105	168	94	190	254	180	141	70	98	122	151	3
110	238	365	123	175	94	190	301	180	164	120	98	122	174	4

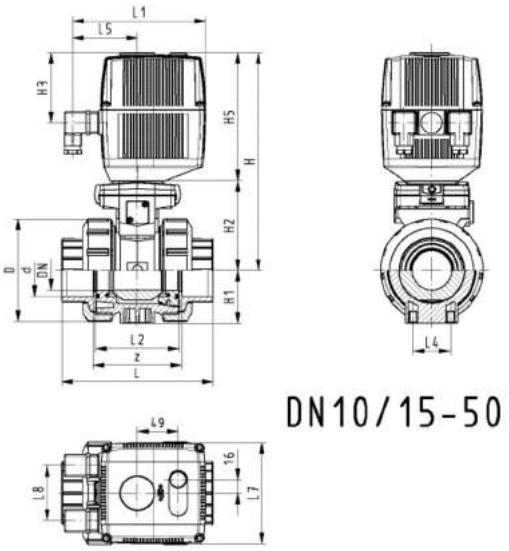

DN10/15-50

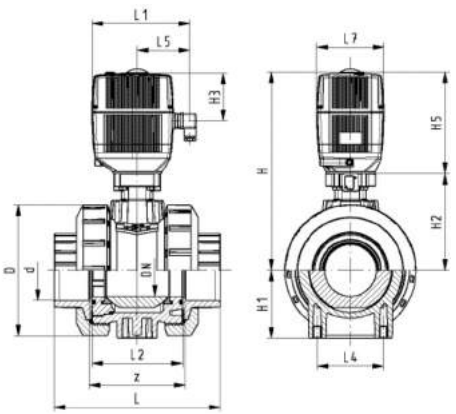

DN65-100

PF 3 39 695 632

DN10/15 - 50

Ball valve type 130 PVC-C 100-230V
With manual emergency override
With solvent cement spigots metric

Model:

- Voltage 100-230 V, 50-60 Hz
- Control range 90°<)
- Control time: EA21: 5s/90°<), EA31: 15s/90°<)
- Assignment of actuators: EA21 (DN10/15-50), EA31 (DN65-100)
- For easy installation and removal
- Integrated stainless steel mounting inserts

Option:

- Individual configuration of the valve (see diagram)

d [mm]	DN [mm]	PN [bar]	kv-value (Δp=1 bar) [l/min]	EPDM Code	SP	Weight [kg]	FPM Code	SP	Weight [kg]
16	10	10	70	**199 130 422**	1	2.100	**199 130 432**	1	2.100
20	15	10	185	**199 130 423**	1	2.100	**199 130 433**	1	2.100
25	20	10	350	**199 130 424**	1	2.200	**199 130 434**	1	2.200
32	25	10	700	**199 130 425**	1	2.300	**199 130 435**	1	2.300
40	32	10	1000	**199 130 426**	1	2.600	**199 130 436**	1	2.600
50	40	10	1600	**199 130 427**	1	3.000	**199 130 437**	1	3.000
63	50	10	3100	**199 130 428**	1	3.800	**199 130 438**	1	3.800
75	65	10	5000	**199 130 429**	1	7.900	**199 130 439**	1	7.900
90	80	10	7000	**199 130 430**	1	10.600	**199 130 440**	1	10.600
110	100	10	11000	**199 130 431**	1	15.300	**199 130 441**	1	15.300

d [mm]	D [mm]	H [mm]	H1 [mm]	H2 [mm]	H3 [mm]	H5 [mm]	L [mm]	L1 [mm]	L2 [mm]	L3 [mm]	L4 [mm]	L5 [mm]	L7 [mm]	closest inch [inch]
16	50	231	27	64	94	167	114	180	56	130	25	97	122	⅜
20	50	231	27	64	94	167	124	180	56	130	25	97	122	½
25	58	240	30	73	94	167	144	180	65	150	25	97	122	¾
32	68	240	36	73	94	167	154	180	71	160	25	97	122	1
40	84	251	44	84	94	167	174	180	85	180	45	97	122	1 ¼
50	97	251	51	84	94	167	194	180	89	200	45	97	122	1 ½
63	124	273	64	106	94	167	224	180	101	230	45	97	122	2
75	166	346	85	156	94	190	284	180	136	290	70	98	122	2 ½
90	200	358	105	168	94	190	300	180	141	310	70	98	122	3
110	238	365	123	175	94	190	340	180	164	350	120	98	122	4

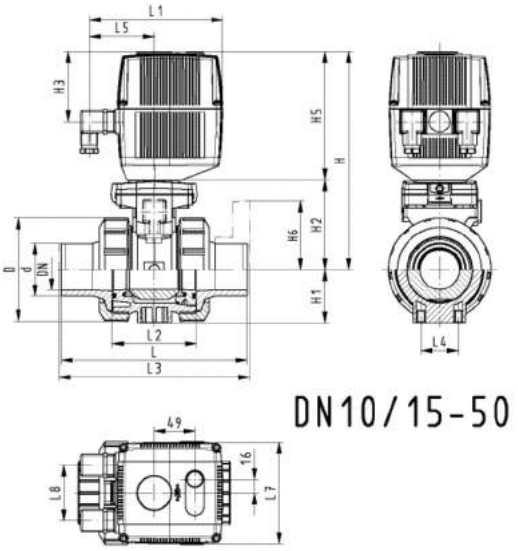

DN10/15-50

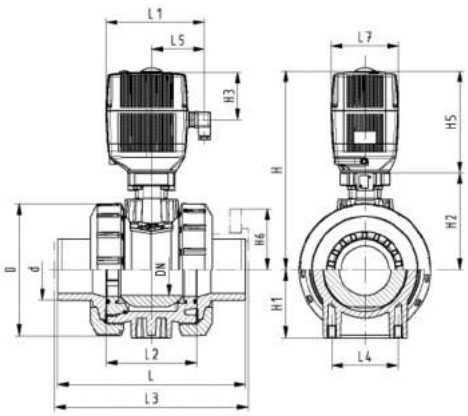

DN65-100

PF 3 39 695 632

DN10/15 - 50

Ball valve type 130 PVC-C 100-230V
With manual emergency override
With threaded sockets Rp

Model:

- Voltage 100-230 V, 50-60 Hz
- Control range 90°<)
- Control time: EA21: 5s/90°<), EA31: 15s/90°<)
- Assignment of actuators: EA21 (DN10/15-50), EA31 (DN65-100)
- For easy installation and removal
- Integrated stainless steel mounting inserts

Option:

- Individual configuration of the valve (see diagram)

Rp [inch]	DN [mm]	PN [bar]	kv-value (Δp=1 bar) [l/min]	EPDM Code	SP	Weight [kg]	FPM Code	SP	Weight [kg]
⅜	10	10	70	**199 130 182**	1	2.100	**199 130 192**	1	2.100
½	15	10	185	**199 130 183**	1	2.100	**199 130 193**	1	2.100
¾	20	10	350	**199 130 184**	1	2.200	**199 130 194**	1	2.200
1	25	10	700	**199 130 185**	1	2.300	**199 130 195**	1	2.300
1 ¼	32	10	1000	**199 130 186**	1	2.600	**199 130 196**	1	2.600
1 ½	40	10	1600	**199 130 187**	1	3.000	**199 130 197**	1	3.000
2	50	10	3100	**199 130 188**	1	3.800	**199 130 198**	1	3.800
2 ½	65	10	5000	**199 130 189**	1	7.800	**199 130 199**	1	7.800
3	80	10	7000	**199 130 190**	1	10.600	**199 130 200**	1	10.600
4	100	10	11000	**199 130 191**	1	15.200	**199 130 201**	1	15.200

Rp [inch]	D [mm]	H [mm]	H1 [mm]	H2 [mm]	H3 [mm]	H5 [mm]	L [mm]	L1 [mm]	L2 [mm]	L4 [mm]	L5 [mm]	L7 [mm]	z [mm]
⅜	50	231	27	64	94	167	92	180	56	25	97	122	64
½	50	231	27	64	94	167	95	180	56	25	97	122	64
¾	58	240	30	73	94	167	110	180	65	25	97	122	72
1	68	240	36	73	94	167	123	180	71	25	97	122	79
1 ¼	84	251	44	84	94	167	146	180	85	45	97	122	94
1 ½	97	251	51	84	94	167	157	180	89	45	97	122	95
2	124	273	64	106	94	167	183	180	101	45	97	122	107
2 ½	166	346	85	156	94	190	233	180	136	70	98	122	144
3	200	358	105	168	94	190	254	180	141	70	98	122	151
4	238	365	123	175	94	190	301	180	164	120	98	122	174

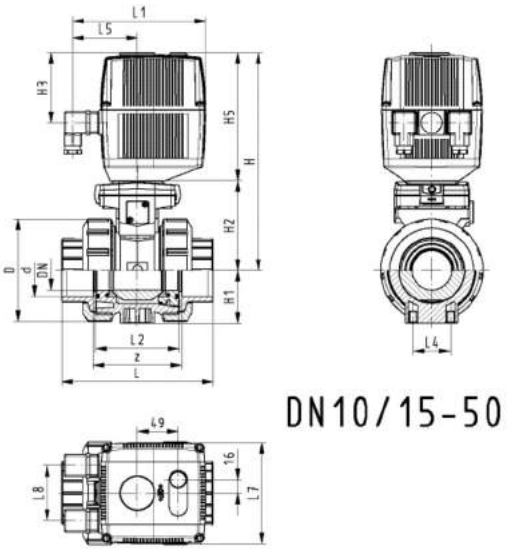

DN10/15-50

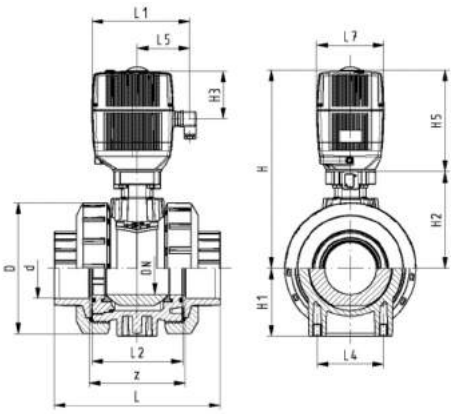

DN65-100

PF 3 39 695 632

Ball valve type 130 PVC-C 100-230V
With manual emergency override
With backing flanges PP-st metric

Model:

- Voltage 100-230 V, 50-60 Hz
- Control range 90°<)
- Control time: EA21: 5s/90°<), EA31: 15s/90°<)
- Assignment of actuators: EA21 (DN10/15-50), EA31 (DN65-100)
- For easy installation and removal
- Integrated stainless steel mounting inserts
- Overall length according to EN 558
- Connecting dimesnsion: ISO 7005, EN 1092, BS 4504, DIN 2501

Option:

- Individual configuration of the valve (see diagram)

d [mm]	DN [mm]	PN [bar]	kv-value (Δp=1 bar) [l/min]	EPDM Code	SP	Weight [kg]	FPM Code	SP	Weight [kg]
75	65	10	5000	**199 134 489**	1	11.900	**199 134 499**	1	11.900
90	80	10	7000	**199 134 490**	1	15.400	**199 134 500**	1	15.400
110	100	10	11000	**199 134 491**	1	21.800	**199 134 501**	1	21.800

d [mm]	D [mm]	H [mm]	H1 [mm]	H2 [mm]	H3 [mm]	H5 [mm]	H6 [mm]	L [mm]	L1 [mm]	L2 [mm]	L3 [mm]	L4 [mm]	L5 [mm]	L6 [mm]	L7 [mm]
75	166	346	85	156	94	190	93	284	180	136	290	70	98	83	122
90	200	358	105	168	94	190	100	300	180	141	310	70	98	83	122
110	238	365	123	175	94	190	110	340	180	164	350	120	98	83	122

d [mm]	L8 [mm]
75	66
90	66
110	66

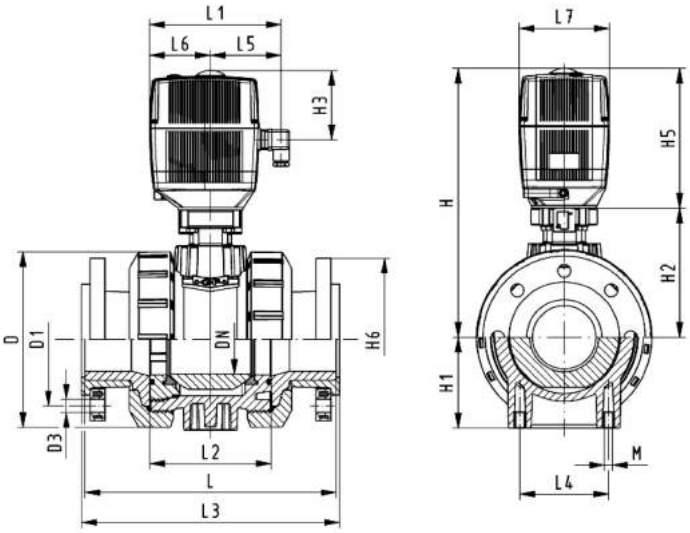

PF 3 39 695 632

DN10/15 - 50

Ball valve type 130 PVC-C 24V
With manual emergency override
With solvent cement sockets metric

Model:

- Voltage 24 V AC/DC
- Control range 90°<)
- Control time: EA21: 5s/90°<), EA31: 15s/90°<)
- Assignment of actuators: EA21 (DN10/15-50), EA31 (DN65-100)
- For easy installation and removal
- Integrated stainless steel mounting inserts

Option:

- Individual configuration of the valve (see diagram)

d [mm]	DN [mm]	PN [bar]	kv-value (Δp=1 bar) [l/min]	EPDM Code	SP	Weight [kg]	FPM Code	SP	Weight [kg]
16	10	10	70	**199 130 442**	1	2.100	**199 130 452**	1	2.100
20	15	10	185	**199 130 443**	1	2.100	**199 130 453**	1	2.100
25	20	10	350	**199 130 444**	1	2.200	**199 130 454**	1	2.200
32	25	10	700	**199 130 445**	1	2.300	**199 130 455**	1	2.674
40	32	10	1000	**199 130 446**	1	2.600	**199 130 456**	1	2.600
50	40	10	1600	**199 130 447**	1	3.000	**199 130 457**	1	3.000
63	50	10	3100	**199 130 448**	1	3.800	**199 130 458**	1	3.800
75	65	10	5000	**199 130 449**	1	7.700	**199 130 459**	1	7.700
90	80	10	7000	**199 130 450**	1	10.400	**199 130 460**	1	9.825
110	100	10	11000	**199 130 451**	1	15.100	**199 130 461**	1	15.100

d [mm]	D [mm]	H [mm]	H1 [mm]	H2 [mm]	H3 [mm]	H5 [mm]	L [mm]	L1 [mm]	L2 [mm]	L4 [mm]	L5 [mm]	L7 [mm]	z [mm]	closest inch [inch]
16	50	231	27	64	94	167	92	180	56	25	97	122	64	⅜
20	50	231	27	64	94	167	95	180	56	25	97	122	64	½
25	58	240	30	73	94	167	110	180	65	25	97	122	72	¾
32	68	240	36	73	94	167	123	180	71	25	97	122	79	1
40	84	251	44	84	94	167	146	180	85	45	97	122	94	1 ¼
50	97	251	51	84	94	167	157	180	89	45	97	122	95	1 ½
63	124	273	64	106	94	167	183	180	101	45	97	122	107	2
75	166	346	85	156	94	190	233	180	136	70	98	122	144	2 ½
90	200	358	105	168	94	190	254	180	141	70	98	122	151	3
110	238	365	123	175	94	190	301	180	164	120	98	122	174	4

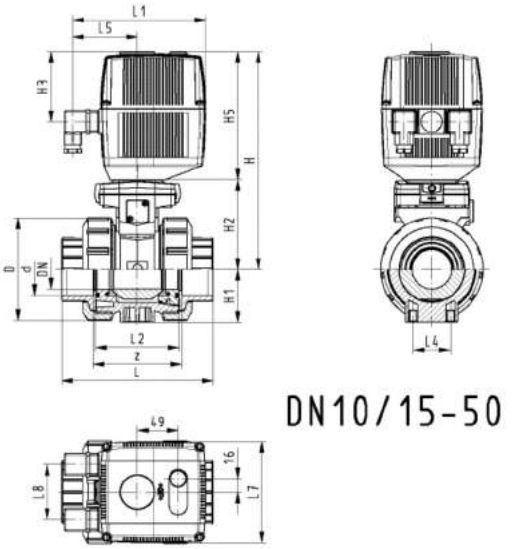

DN10/15-50

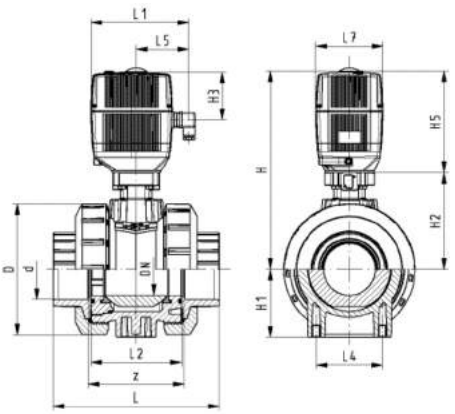

DN65-100

PF 3 39 695 632

DN10/15 - 50

Ball valve type 130 PVC-C 24V
With manual emergency override
With solvent cement spigots metric

Model:

- Voltage 24 V AC/DC
- Control range 90°<)
- Control time: EA21: 5s/90°<), EA31: 15s/90°<)
- Assignment of actuators: EA21 (DN10/15-50), EA31 (DN65-100)
- For easy installation and removal
- Integrated stainless steel mounting inserts

Option:

- Individual configuration of the valve (see diagram)

d [mm]	DN [mm]	PN [bar]	kv-value (Δp=1 bar) [l/min]	EPDM Code	SP	Weight [kg]	FPM Code	SP	Weight [kg]
16	10	10	70	**199 130 462**	1	2.100	**199 130 472**	1	2.100
20	15	10	185	**199 130 463**	1	2.100	**199 130 473**	1	2.100
25	20	10	350	**199 130 464**	1	2.200	**199 130 474**	1	2.200
32	25	10	700	**199 130 465**	1	2.300	**199 130 475**	1	2.300
40	32	10	1000	**199 130 466**	1	2.600	**199 130 476**	1	2.600
50	40	10	1600	**199 130 467**	1	3.000	**199 130 477**	1	3.000
63	50	10	3100	**199 130 468**	1	3.800	**199 130 478**	1	3.800
75	65	10	5000	**199 130 469**	1	7.900	**199 130 479**	1	7.900
90	80	10	7000	**199 130 470**	1	10.600	**199 130 480**	1	10.600
110	100	10	11000	**199 130 471**	1	15.300	**199 130 481**	1	15.300

d [mm]	D [mm]	H [mm]	H1 [mm]	H2 [mm]	H3 [mm]	H5 [mm]	L [mm]	L1 [mm]	L2 [mm]	L3 [mm]	L4 [mm]	L5 [mm]	L7 [mm]	closest inch [inch]
16	50	231	27	64	94	167	114	180	56	0	25	97	122	⅜
20	50	231	27	64	94	167	124	180	56	130	25	97	122	½
25	58	240	30	73	94	167	144	180	65	150	25	97	122	¾
32	68	240	36	73	94	167	154	180	71	160	25	97	122	1
40	84	251	44	84	94	167	174	180	85	180	45	97	122	1 ¼
50	97	251	51	84	94	167	194	180	89	200	45	97	122	1 ½
63	124	273	64	106	94	167	224	180	101	230	45	97	122	2
75	166	346	85	156	94	190	284	180	136	290	70	98	122	2 ½
90	200	358	105	168	94	190	300	180	141	310	70	98	122	3
110	238	365	123	175	94	190	340	180	164	350	120	98	122	4

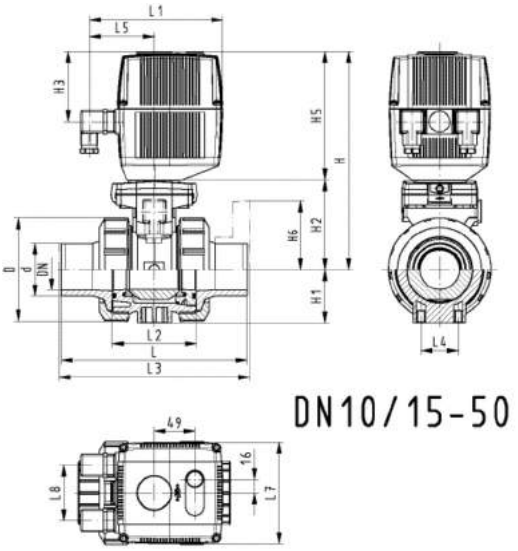

DN10/15-50

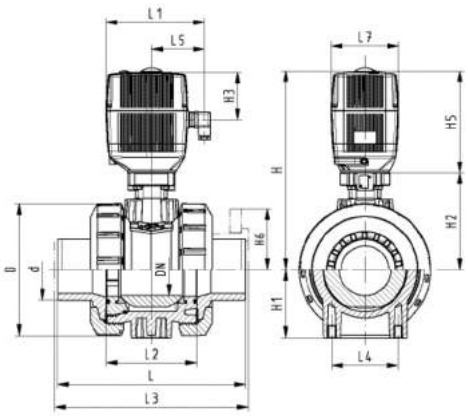

DN65-100

PF 3 39 695 632

DN10/15 - 50

Ball valve type 130 PVC-C 24V
With manual emergency override
With threaded sockets Rp

Model:

- Voltage 24 V AC/DC
- Control range 90°<)
- Control time: EA21: 5s/90°<), EA31: 15s/90°<)
- Assignment of actuators: EA21 (DN10/15-50), EA31 (DN65-100)
- For easy installation and removal
- Integrated stainless steel mounting inserts

Option:

- Individual configuration of the valve (see diagram)

Rp [inch]	DN [mm]	PN [bar]	kv-value (Δp=1 bar) [l/min]	EPDM Code	SP	Weight [kg]	FPM Code	SP	Weight [kg]
⅜	10	10	70	**199 130 202**	1	2.100	**199 130 212**	1	2.100
½	15	10	185	**199 130 203**	1	2.100	**199 130 213**	1	2.100
¾	20	10	350	**199 130 204**	1	2.200	**199 130 214**	1	2.200
1	25	10	700	**199 130 205**	1	2.300	**199 130 215**	1	2.300
1 ¼	32	10	1000	**199 130 206**	1	2.600	**199 130 216**	1	2.600
1 ½	40	10	1600	**199 130 207**	1	3.000	**199 130 217**	1	3.000
2	50	10	3100	**199 130 208**	1	3.800	**199 130 218**	1	3.800
2 ½	65	10	5000	**199 130 209**	1	7.800	**199 130 219**	1	7.800
3	80	10	7000	**199 130 210**	1	10.600	**199 130 220**	1	10.600
4	100	10	11000	**199 130 211**	1	15.200	**199 130 221**	1	15.200

Rp [inch]	D [mm]	H [mm]	H1 [mm]	H2 [mm]	H3 [mm]	H5 [mm]	L [mm]	L1 [mm]	L2 [mm]	L4 [mm]	L5 [mm]	L7 [mm]	z [mm]
⅜	50	231	27	64	94	167	92	180	56	25	97	122	64
½	50	231	27	64	94	167	95	180	56	25	97	122	64
¾	58	240	30	73	94	167	110	180	65	25	97	122	72
1	68	240	36	73	94	167	123	180	71	25	97	122	79
1 ¼	84	251	44	84	94	167	146	180	85	45	97	122	94
1 ½	97	251	51	84	94	167	157	180	89	45	97	122	95
2	124	273	64	106	94	167	183	180	101	45	97	122	107
2 ½	166	346	85	156	94	190	233	180	136	70	98	122	144
3	200	358	105	168	94	190	254	180	141	70	98	122	151
4	238	365	123	175	94	190	301	180	164	120	98	122	174

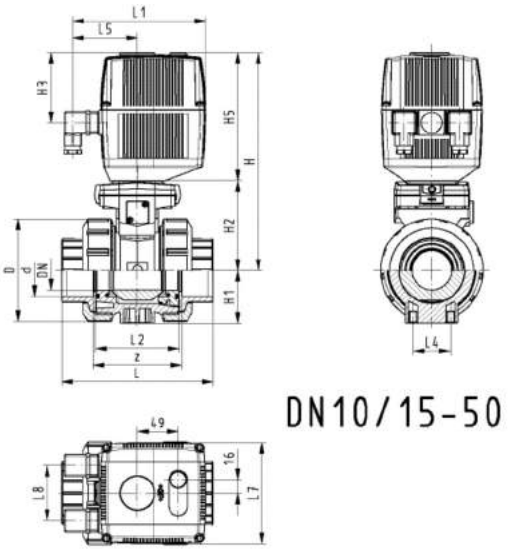

DN10/15-50

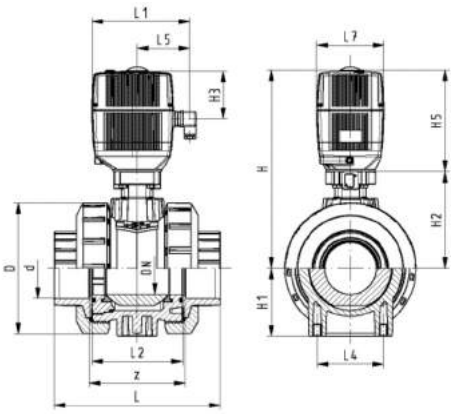

DN65-100

PF 3 39 695 632

Ball valve type 130 PVC-C 24V
With manual emergency override
With backing flanges PP-st metric

Model:

- Voltage 24 V AC/DC
- Control range 90°<)
- Control time: EA21: 5s/90°<), EA31: 15s/90°<)
- Assignment of actuators: EA21 (DN10/15-50), EA31 (DN65-100)
- For easy installation and removal
- Integrated stainless steel mounting inserts
- Overall length according to EN 558
- Connecting dimesnsion: ISO 7005, EN 1092, BS 4504, DIN 2501

Option:

- Individual configuration of the valve (see diagram)

d [mm]	DN [mm]	PN [bar]	kv-value (Δp=1 bar) [l/min]	EPDM Code	SP	Weight [kg]	FPM Code	SP	Weight [kg]
75	65	10	5000	**199 134 509**	1	11.900	**199 134 519**	1	11.900
90	80	10	7000	**199 134 510**	1	15.400	**199 134 520**	1	15.400
110	100	10	11000	**199 134 511**	1	21.800	**199 134 521**	1	21.800

d [mm]	D [mm]	H [mm]	H1 [mm]	H2 [mm]	H3 [mm]	H5 [mm]	H6 [mm]	L [mm]	L1 [mm]	L2 [mm]	L3 [mm]	L4 [mm]	L5 [mm]	L6 [mm]	L7 [mm]
75	166	346	85	156	94	190	93	284	180	136	290	70	98	83	122
90	200	358	105	168	94	190	100	300	180	141	310	70	98	83	122
110	238	365	123	175	94	190	110	340	180	164	350	120	98	83	122

d [mm]	L8 [mm]
75	66
90	66
110	66

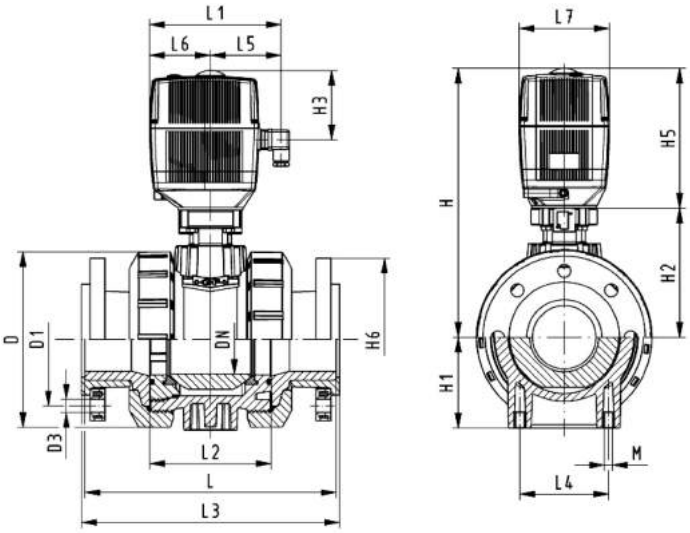

PF 3 39 695 632

185

3-Way ball valve type 185 PVC-C
Horizontal/T-port 100-230V
With manual emergency override
With solvent cement sockets metric

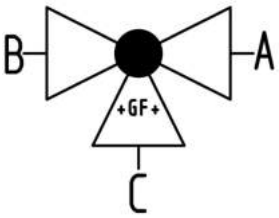

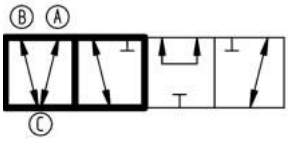

Model:

- Built on with electric actuator EA21
- Voltage 100-230 V, 50-60 Hz
- Control range 90°<)
- Basic position A-B-C opened, activated position B-C opened, see flow scheme
- Other positions possible by adjusting the limit switches
- Control time 5 s/90°<)
- For easy installation and removal
- Integrated stainless steel mounting inserts

d [mm]	DN [mm]	PN [bar]	kv-value (Δp=1 bar) [l/min]	EPDM Code	SP	Weight [kg]	FPM Code	SP	Weight [kg]
16	10	10	140	**199 185 142**	1	2.142	**199 185 152**	1	2.142
20	15	10	200	**199 185 143**	1	2.148	**199 185 153**	1	2.148
25	20	10	470	**199 185 144**	1	2.285	**199 185 154**	1	2.285
32	25	10	793	**199 185 145**	1	2.486	**199 185 155**	1	2.486
40	32	10	1290	**199 185 146**	1	2.939	**199 185 156**	1	2.939
50	40	10	1910	**199 185 147**	1	3.419	**199 185 157**	1	3.419
63	50	10	3100	**199 185 148**	1	4.867	**199 185 158**	1	4.867

d [mm]	D [mm]	H [mm]	H1 [mm]	H2 [mm]	H3 [mm]	H5 [mm]	H6 [mm]	L [mm]	L1 [mm]	L2 [mm]	L3 [mm]	L4 [mm]	L5 [mm]	L6 [mm]	L7 [mm]
16	50	231	28	64	94	167	8	109	180	73	36	25	97	83	122
20	50	231	28	64	94	167	8	112	180	73	36	25	97	83	122
25	58	240	32	73	94	167	8	131	180	86	43	25	97	83	122
32	68	240	36	73	94	167	8	151	180	99	50	25	97	83	122
40	84	251	45	84	94	167	9	181	180	120	60	45	97	83	122
50	97	251	51	84	94	167	9	205	180	137	69	45	97	83	122
63	124	273	65	106	94	167	9	261	180	179	89	45	97	83	122

d [mm]	L8 [mm]	M	z [mm]	z1 [mm]	closest inch [inch]
16	33	6	81	40	⅜
20	33	6	81	40	½
25	33	6	94	47	¾
32	33	6	107	54	1
40	33	8	130	65	1 ¼
50	33	8	143	72	1 ½
63	33	8	185	92	2

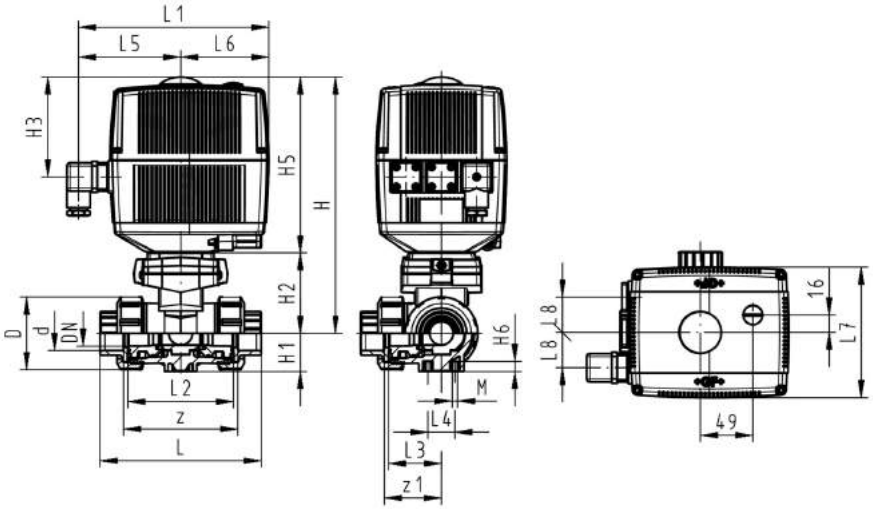

PF 3 39 980 032

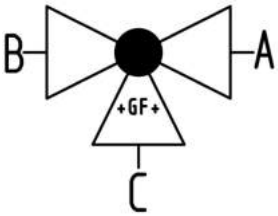

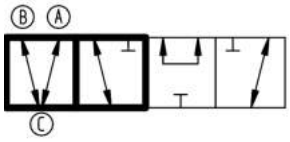

3-Way ball valve type 185 PVC-C Horizontal/T-port 100-230V With manual emergency override With solvent cement spigots metric

Model:

- Built on with electric actuator EA21
- Voltage 100-230 V, 50-60 Hz
- Control range 90°<)
- Basic position A-B-C opened, activated position B-C opened, see flow scheme
- Other positions possible by adjusting the limit switches
- Control time 5 s/90°<)
- For easy installation and removal
- Integrated stainless steel mounting inserts

d [mm]	DN [mm]	PN [bar]	kv-value (Δp=1 bar) [l/min]	EPDM Code	SP	Weight [kg]	FPM Code	SP	Weight [kg]
16	10	10	140	**199 185 122**	1	2.148	**199 185 132**	1	2.148
20	15	10	200	**199 185 123**	1	2.158	**199 185 133**	1	2.158
25	20	10	470	**199 185 124**	1	2.301	**199 185 134**	1	2.301
32	25	10	793	**199 185 125**	1	2.512	**199 185 135**	1	2.512
40	32	10	1290	**199 185 126**	1	2.961	**199 185 136**	1	2.961
50	40	10	1910	**199 185 127**	1	3.487	**199 185 137**	1	3.487
63	50	10	3100	**199 185 128**	1	5.004	**199 185 138**	1	5.004

d [mm]	D [mm]	H [mm]	H1 [mm]	H2 [mm]	H3 [mm]	H5 [mm]	H6 [mm]	L [mm]	L1 [mm]	L2 [mm]	L3 [mm]	L4 [mm]	L5 [mm]	L6 [mm]	L7 [mm]
16	50	231	28	64	94	167	8	131	180	73	36	25	97	83	122
20	50	231	28	64	94	167	8	141	180	73	36	25	97	83	122
25	58	240	32	73	94	167	8	165	180	86	43	25	97	83	122
32	68	240	36	73	94	167	8	182	180	99	50	25	97	83	122
40	84	251	45	84	94	167	9	209	180	120	60	45	97	83	122
50	97	251	51	84	94	167	9	242	180	137	69	45	97	83	122
63	124	273	65	106	94	167	9	302	180	179	89	45	97	83	122

d [mm]	L8 [mm]	M	closest inch [inch]
16	33	6	⅜
20	33	6	½
25	33	6	¾
32	33	6	1
40	33	8	1 ¼
50	33	8	1 ½
63	33	8	2

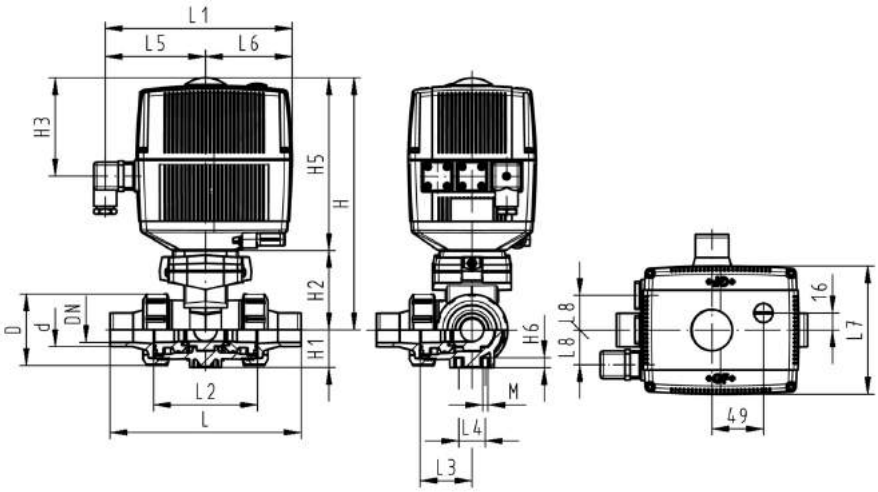

PF 3 39 980 032

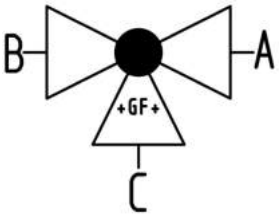

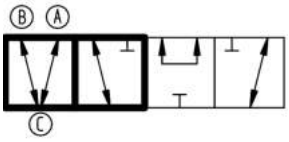

3-Way ball valve type 185 PVC-C Horizontal/T-port 24V With manual emergency override With solvent cement sockets metric

Model:

- Built on with electric actuator EA21
- Voltage 24 V AC/DC
- Control range 90°<)
- Basic position A-B-C opened, activated position B-C opened, see flow scheme
- Other positions possible by adjusting the limit switches
- Control time 5 s/90°<)
- For easy installation and removal
- Integrated stainless steel mounting inserts

d [mm]	DN [mm]	PN [bar]	kv-value (Δp=1 bar) [l/min]	EPDM Code	SP	Weight [kg]	FPM Code	SP	Weight [kg]
16	10	10	140	**199 185 322**	1	2.142	**199 185 332**	1	2.142
20	15	10	200	**199 185 323**	1	2.148	**199 185 333**	1	2.148
25	20	10	470	**199 185 324**	1	2.285	**199 185 334**	1	2.285
32	25	10	793	**199 185 325**	1	2.486	**199 185 335**	1	2.486
40	32	10	1290	**199 185 326**	1	2.939	**199 185 336**	1	2.939
50	40	10	1910	**199 185 327**	1	3.419	**199 185 337**	1	3.419
63	50	10	3100	**199 185 328**	1	4.867	**199 185 338**	1	4.867

d [mm]	D [mm]	H [mm]	H1 [mm]	H2 [mm]	H3 [mm]	H5 [mm]	H6 [mm]	L [mm]	L1 [mm]	L2 [mm]	L3 [mm]	L4 [mm]	L5 [mm]	L6 [mm]	L7 [mm]
16	50	231	28	64	94	167	8	109	180	73	36	25	97	83	122
20	50	231	28	64	94	167	8	112	180	73	36	25	97	83	122
25	58	240	32	73	94	167	8	131	180	86	43	25	97	83	122
32	68	240	36	73	94	167	8	151	180	99	50	25	97	83	122
40	84	251	45	84	94	167	9	181	180	120	60	45	97	83	122
50	97	251	51	84	94	167	9	205	180	137	69	45	97	83	122
63	124	273	65	106	94	167	9	261	180	179	89	45	97	83	122

d [mm]	L8 [mm]	M	z [mm]	z1 [mm]	closest inch [inch]
16	33	6	81	40	⅜
20	33	6	81	40	½
25	33	6	94	47	¾
32	33	6	107	54	1
40	33	8	130	65	1 ¼
50	33	8	143	72	1 ½
63	33	8	185	92	2

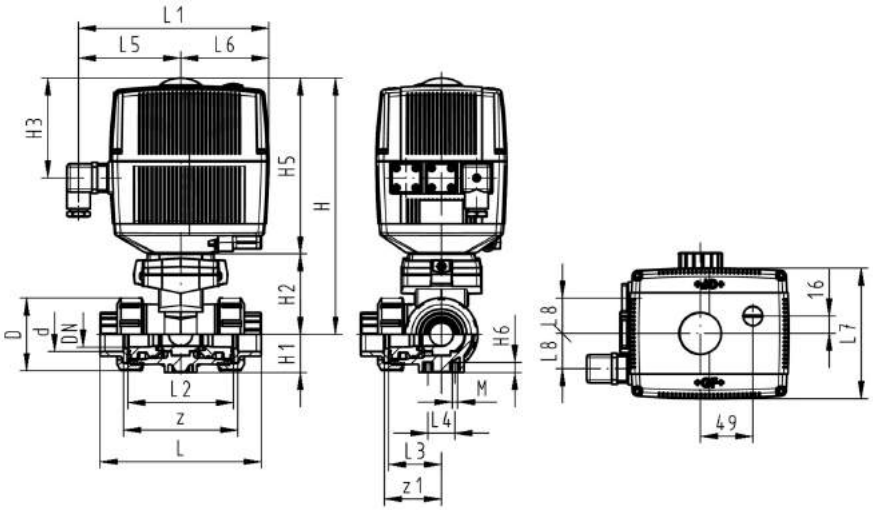

PF 3 39 980 032

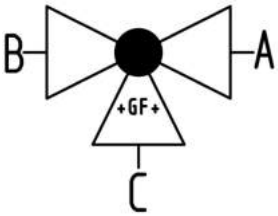

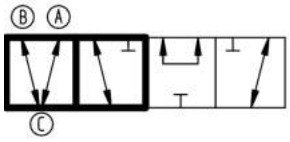

3-Way ball valve type 185 PVC-C Horizontal/T-port 24V With manual emergency override With solvent cement spigots metric

Model:

- Built on with electric actuator EA21
- Voltage 24 V AC/DC
- Control range 90°<)
- Basic position A-B-C opened, activated position B-C opened, see flow scheme
- Other positions possible by adjusting the limit switches
- Control time 5 s/90°<)
- For easy installation and removal
- Integrated stainless steel mounting inserts

d [mm]	DN [mm]	PN [bar]	kv-value (Δp=1 bar) [l/min]	EPDM Code	SP	Weight [kg]	FPM Code	SP	Weight [kg]
16	10	10	140	**199 185 302**	1	2.148	**199 185 312**	1	2.148
20	15	10	200	**199 185 303**	1	2.158	**199 185 313**	1	2.158
25	20	10	470	**199 185 304**	1	2.301	**199 185 314**	1	2.301
32	25	10	793	**199 185 305**	1	2.512	**199 185 315**	1	2.512
40	32	10	1290	**199 185 306**	1	2.961	**199 185 316**	1	2.961
50	40	10	1910	**199 185 307**	1	3.487	**199 185 317**	1	3.487
63	50	10	3100	**199 185 308**	1	5.004	**199 185 318**	1	5.004

d [mm]	D [mm]	H [mm]	H1 [mm]	H2 [mm]	H3 [mm]	H5 [mm]	H6 [mm]	L [mm]	L1 [mm]	L2 [mm]	L3 [mm]	L4 [mm]	L5 [mm]	L6 [mm]	L7 [mm]
16	50	231	28	64	94	167	8	131	180	73	36	25	97	83	122
20	50	231	28	64	94	167	8	141	180	73	36	25	97	83	122
25	58	240	32	73	94	167	8	165	180	86	43	25	97	83	122
32	68	240	36	73	94	167	8	182	180	99	50	25	97	83	122
40	84	251	45	84	94	167	9	209	180	120	60	45	97	83	122
50	97	251	51	84	94	167	9	242	180	137	69	45	97	83	122
63	124	273	65	106	94	167	9	302	180	179	89	45	97	83	122

d [mm]	L8 [mm]	M	closest inch [inch]
16	33	6	⅜
20	33	6	½
25	33	6	¾
32	33	6	1
40	33	8	1 ¼
50	33	8	1 ½
63	33	8	2

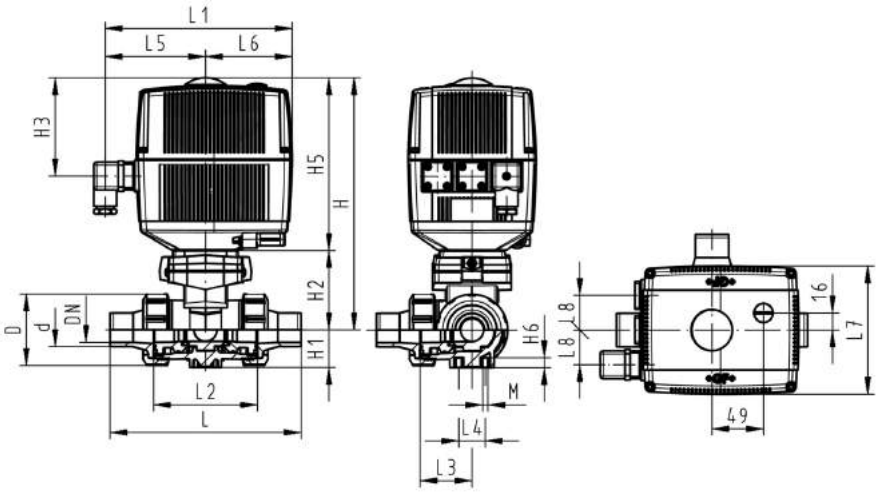

PF 3 39 980 032

3-Way ball valve type 185 PVC-C Horizontal/L-port 100-230V With manual emergency override With solvent cement sockets metric

Model:

- Built on with electric actuator EA21
- Voltage 100-230 V, 50-60 Hz
- Control range 90°<)
- Basic position A-C opened, activated position B-C opened, see flow scheme
- Other positions possible by adjusting the limit switches
- Control time 5 s/90°<)
- For easy installation and removal
- Integrated stainless steel mounting inserts

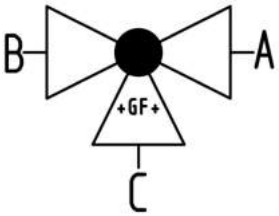

d [mm]	DN [mm]	PN [bar]	kv-value (Δp=1 bar) [l/min]	EPDM Code	SP	Weight [kg]	FPM Code	SP	Weight [kg]
16	10	10	50	**199 185 102**	1	2.143	**199 185 112**	1	2.143
20	15	10	75	**199 185 103**	1	2.149	**199 185 113**	1	2.149
25	20	10	150	**199 185 104**	1	2.287	**199 185 114**	1	2.287
32	25	10	280	**199 185 105**	1	2.493	**199 185 115**	1	2.493
40	32	10	480	**199 185 106**	1	2.950	**199 185 116**	1	2.950
50	40	10	620	**199 185 107**	1	3.441	**199 185 117**	1	3.441
63	50	10	1230	**199 185 108**	1	4.916	**199 185 118**	1	4.916

d [mm]	D [mm]	H [mm]	H1 [mm]	H2 [mm]	H3 [mm]	H5 [mm]	H6 [mm]	L [mm]	L1 [mm]	L2 [mm]	L3 [mm]	L4 [mm]	L5 [mm]	L6 [mm]	L7 [mm]
16	50	231	28	64	94	167	8	109	180	73	36	25	97	83	122
20	50	231	28	64	94	167	8	112	180	73	36	25	97	83	122
25	58	240	32	73	94	167	8	131	180	86	43	25	97	83	122
32	68	240	36	73	94	167	8	151	180	99	50	25	97	83	122
40	84	251	45	84	94	167	9	181	180	120	60	45	97	83	122
50	97	251	51	84	94	167	9	205	180	137	69	45	97	83	122
63	124	273	65	106	94	167	9	261	180	179	89	45	97	83	122

d [mm]	L8 [mm]	M	z [mm]	z1 [mm]	closest inch [inch]
16	33	6	81	40	⅜
20	33	6	81	40	½
25	33	6	94	47	¾
32	33	6	107	54	1
40	33	8	130	65	1 ¼
50	33	8	143	72	1 ½
63	33	8	185	92	2

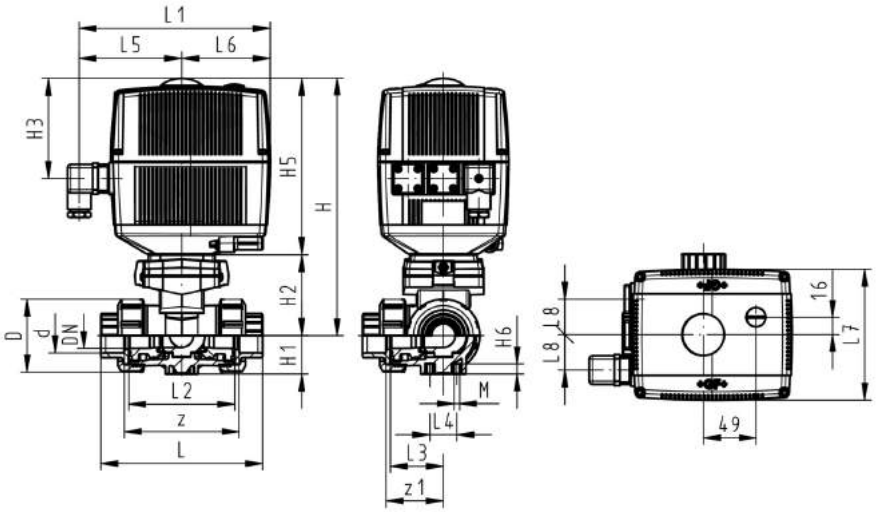

PF 3 39 980 032

3-Way ball valve type 185 PVC-C
Horizontal/L-port 100-230V
With manual emergency override
With solvent cement spigots metric

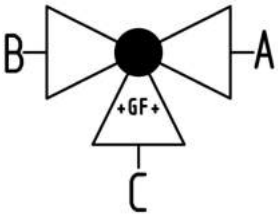

Model:

- Built on with electric actuator EA21
- Voltage 100-230 V, 50-60 Hz
- Control range 90°<)
- Basic position A-C opened, activated position B-C opened, see flow scheme
- Other positions possible by adjusting the limit switches
- Control time 5 s/90°<)
- For easy installation and removal
- Integrated stainless steel mounting inserts

d [mm]	DN [mm]	PN [bar]	kv-value (Δp=1 bar) [l/min]	EPDM Code	SP	Weight [kg]	FPM Code	SP	Weight [kg]
16	10	10	50	**199 185 082**	1	2.149	**199 185 092**	1	2.149
20	15	10	75	**199 185 083**	1	2.159	**199 185 093**	1	2.159
25	20	10	150	**199 185 084**	1	2.303	**199 185 094**	1	2.303
32	25	10	280	**199 185 085**	1	2.519	**199 185 095**	1	2.519
40	32	10	480	**199 185 086**	1	2.973	**199 185 096**	1	2.973
50	40	10	620	**199 185 087**	1	3.510	**199 185 097**	1	3.510
63	50	10	1230	**199 185 088**	1	5.053	**199 185 098**	1	5.053

d [mm]	D [mm]	H [mm]	H1 [mm]	H2 [mm]	H3 [mm]	H5 [mm]	H6 [mm]	L [mm]	L1 [mm]	L2 [mm]	L3 [mm]	L4 [mm]	L5 [mm]	L6 [mm]	L7 [mm]
16	50	231	28	64	94	167	8	131	180	73	36	25	97	83	122
20	50	231	28	64	94	167	8	141	180	73	36	25	97	83	122
25	58	240	32	73	94	167	8	165	180	86	43	25	97	83	122
32	68	240	36	73	94	167	8	182	180	99	50	25	97	83	122
40	84	251	45	84	94	167	9	209	180	120	60	45	97	83	122
50	97	251	51	84	94	167	9	242	180	137	69	45	97	83	122
63	124	273	65	106	94	167	9	302	180	179	89	45	97	83	122

d [mm]	L8 [mm]	M	closest inch [inch]
16	33	6	⅜
20	33	6	½
25	33	6	¾
32	33	6	1
40	33	8	1 ¼
50	33	8	1 ½
63	33	8	2

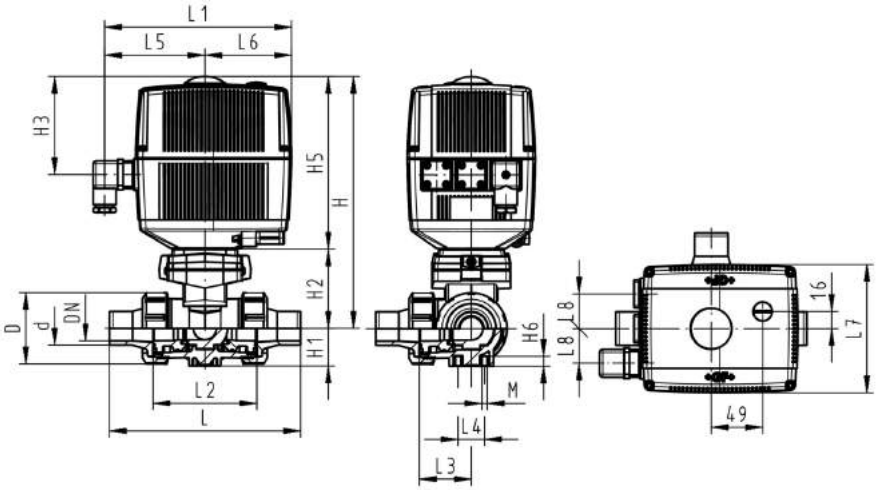

PF 3 39 980 032

3-Way ball valve type 185 PVC-C Horizontal/L-port 24V With manual emergency override With solvent cement sockets metric

Model:

- Built on with electric actuator EA21
- Voltage 24 V AC/DC
- Control range 90°<)
- Basic position A-C opened, activated position B-C opened, see flow scheme
- Other positions possible by adjusting the limit switches
- Control time 5 s/90°<)
- For easy installation and removal
- Integrated stainless steel mounting inserts

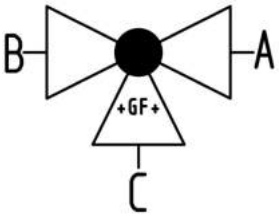

d [mm]	DN [mm]	PN [bar]	kv-value (Δp=1 bar) [l/min]	EPDM Code	SP	Weight [kg]	FPM Code	SP	Weight [kg]
16	10	10	50	**199 185 262**	1	2.143	**199 185 272**	1	2.143
20	15	10	75	**199 185 263**	1	2.149	**199 185 273**	1	2.149
25	20	10	150	**199 185 264**	1	2.287	**199 185 274**	1	2.287
32	25	10	280	**199 185 265**	1	2.493	**199 185 275**	1	2.493
40	32	10	480	**199 185 266**	1	2.950	**199 185 276**	1	2.950
50	40	10	620	**199 185 267**	1	3.766	**199 185 277**	1	3.441
63	50	10	1230	**199 185 268**	1	4.916	**199 185 278**	1	4.916

d [mm]	D [mm]	H [mm]	H1 [mm]	H2 [mm]	H3 [mm]	H5 [mm]	H6 [mm]	L [mm]	L1 [mm]	L2 [mm]	L3 [mm]	L4 [mm]	L5 [mm]	L6 [mm]	L7 [mm]
16	50	231	28	64	94	167	8	109	180	73	36	25	97	83	122
20	50	231	28	64	94	167	8	112	180	73	36	25	97	83	122
25	58	240	32	73	94	167	8	131	180	86	43	25	97	83	122
32	68	240	36	73	94	167	8	151	180	99	50	25	97	83	122
40	84	251	45	84	94	167	9	181	180	120	60	45	97	83	122
50	97	251	51	84	94	167	9	205	180	137	69	45	97	83	122
63	124	273	65	106	94	167	9	261	180	179	89	45	97	83	122

d [mm]	L8 [mm]	M	z [mm]	z1 [mm]	closest inch [inch]
16	33	6	81	40	⅜
20	33	6	81	40	½
25	33	6	94	47	¾
32	33	6	107	54	1
40	33	8	130	65	1 ¼
50	33	8	143	72	1 ½
63	33	8	185	92	2

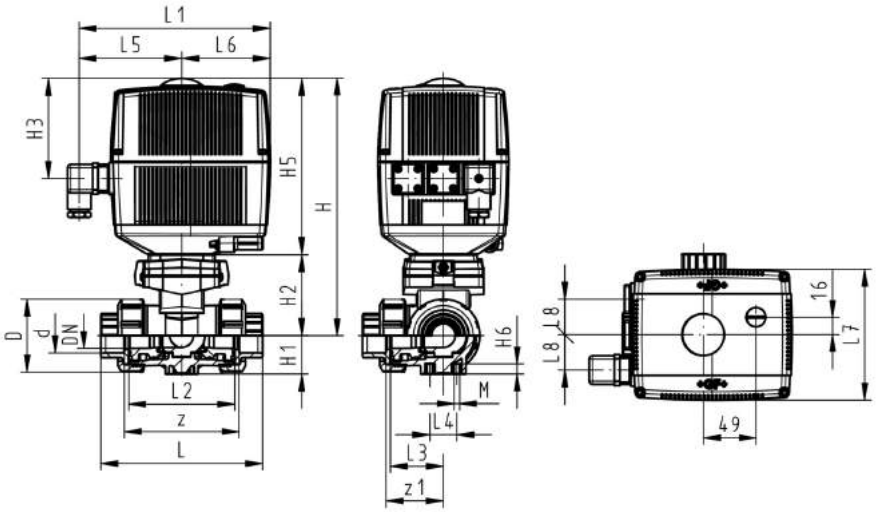

PF 3 39 980 032

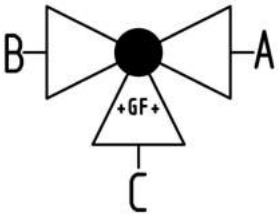

3-Way ball valve type 185 PVC-C Horizontal/L-port 24V With manual emergency override With solvent cement spigots metric

Model:

- Built on with electric actuator EA21
- Voltage 24 V AC/DC
- Control range 90°<)
- Basic position A-C opened, activated position B-C opened, see flow scheme
- Other positions possible by adjusting the limit switches
- Control time 5 s/90°<)
- For easy installation and removal
- Integrated stainless steel mounting inserts

d [mm]	DN [mm]	PN [bar]	kv-value (Δp=1 bar) [l/min]	EPDM Code	SP	Weight [kg]	FPM Code	SP	Weight [kg]
16	10	10	50	**199 185 282**	1	2.149	**199 185 292**	1	2.149
20	15	10	75	**199 185 283**	1	2.159	**199 185 293**	1	2.159
25	20	10	150	**199 185 284**	1	2.303	**199 185 294**	1	2.303
32	25	10	280	**199 185 285**	1	2.519	**199 185 295**	1	2.519
40	32	10	480	**199 185 286**	1	2.973	**199 185 296**	1	2.973
50	40	10	620	**199 185 287**	1	3.510	**199 185 297**	1	3.510
63	50	10	1230	**199 185 288**	1	5.053	**199 185 298**	1	5.053

d [mm]	D [mm]	H [mm]	H1 [mm]	H2 [mm]	H3 [mm]	H5 [mm]	H6 [mm]	L [mm]	L1 [mm]	L2 [mm]	L3 [mm]	L4 [mm]	L5 [mm]	L6 [mm]	L7 [mm]
16	50	231	28	64	94	167	8	131	180	73	36	25	97	83	122
20	50	231	28	64	94	167	8	141	180	73	36	25	97	83	122
25	58	240	32	73	94	167	8	165	180	86	43	25	97	83	122
32	68	240	36	73	94	167	8	182	180	99	50	25	97	83	122
40	84	251	45	84	94	167	9	209	180	120	60	45	97	83	122
50	97	251	51	84	94	167	9	242	180	137	69	45	97	83	122
63	124	273	65	106	94	167	9	302	180	179	89	45	97	83	122

d [mm]	L8 [mm]	M	closest inch [inch]
16	33	6	⅜
20	33	6	½
25	33	6	¾
32	33	6	1
40	33	8	1 ¼
50	33	8	1 ½
63	33	8	2

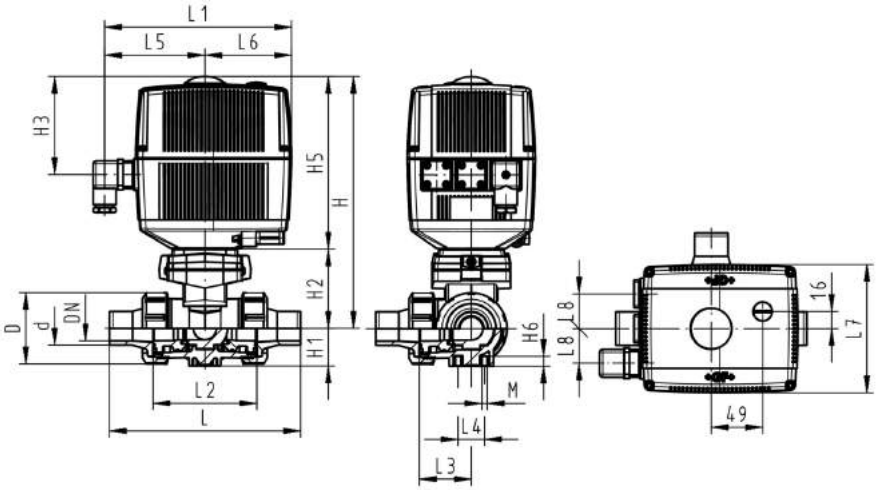

PF 3 39 980 032

104

Ball valve type 104 PVC-C 100-230V With solvent cement sockets metric

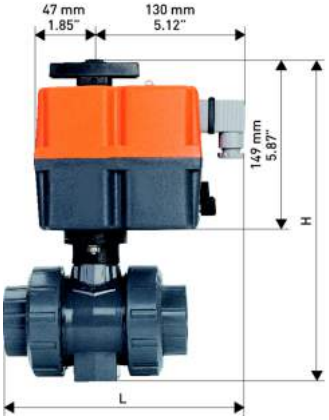

Model:

- Voltage 100-230 V, 50-60 Hz
- Control range 90°<)
- For easy installation and removal
- Integrated stainless steel mounting inserts

d [mm]	DN [mm]	PN [bar]	kv-value (Δp=1 bar) [l/min]	EPDM Code	FPM Code	H [mm]	L [mm]	Type of actuator	B [mm]
16	10	10	70	**199 104 102**	**199 104 112**	194	178.5	10Nm	50
20	15	10	185	**199 104 103**	**199 104 113**	194	178.5	10Nm	50
25	20	10	350	**199 104 104**	**199 104 114**	207	186.0	10Nm	58
32	25	10	700	**199 104 105**	**199 104 115**	217	192.5	10Nm	68
40	32	10	1000	**199 104 106**	**199 104 116**	236	204.5	10Nm	84
50	40	10	1600	**199 104 107**	**199 104 117**	275	208.5	20Nm	97
63	50	10	3100	**199 104 108**	**199 104 118**	307	221.5	20Nm	124

Ball valve type 104 PVC-C 24V With solvent cement sockets metric

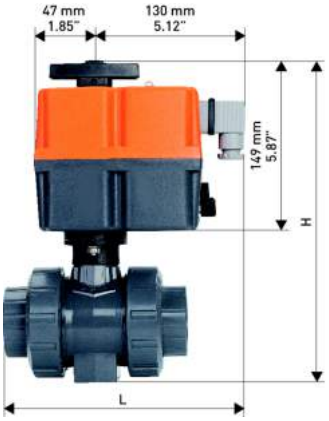

d [mm]	DN [mm]	PN [bar]	kv-value (Δp=1 bar) [l/min]	EPDM Code	FPM Code	H [mm]	L [mm]	Type of actuator	B [mm]
16	10	10	70	**199 104 142**	**199 104 152**	194	178.5	10Nm	50
20	15	10	185	**199 104 143**	**199 104 153**	194	178.5	10Nm	50
25	20	10	350	**199 104 144**	**199 104 154**	207	186.0	10Nm	58
32	25	10	700	**199 104 145**	**199 104 155**	217	192.5	10Nm	68
40	32	10	1000	**199 104 146**	**199 104 156**	236	204.5	10Nm	84
50	40	10	1600	**199 104 147**	**199 104 157**	275	208.5	20Nm	97
63	50	10	3100	**199 104 148**	**199 104 158**	307	221.5	20Nm	124

Notes

Copiable

Configurator GF ball valve type 546 PVC-C

You will find a large selection of different versions in our range of products. New system elements also provide you with new opportunities for use. In order for us to supply exactly the ball valve you need for you application, we have created a selection menu for you.

We supply what you put together.

Ball valve
A01 Ball valve 546

Material
B02 PVC-C

Dimension
C05 DN 10 3/8“
C06 DN 15 1/2“
C07 DN 20 3/4“
C08 DN 25 1“
C09 DN 32 1 1/4“
C10 DN 40 1 1/2“
C11 DN 50 2“
C12 DN 65 2 1/2"
C13 DN 80 3"
C14 DN 100 4"

Version
D01 Standard, PTFE ball seal
D02 Oilfree, PTFE ball seal (only with specific connecting parts)
D03 Silicon-free, PTFE ball seal for inch ASTM (only with specific connecting parts)
D04 Silicon-free, PVDF ball seal for metric (only with specific connecting parts)

Seals
E01 EPDM seals
E02 FPM seals

Threaded inserts
F01 Without threaded inserts
F02 With threaded inserts

Connecting parts
G11 PVC-C Cement socket metric
G12 PVC-C Cement socket JIS
G13 PVC-C Cement socket inch ASTM
G14 PVC-C Cement spigot metric
G15 PVC-C Threaded socket Rp
G16 PVC-C Threaded socket Rp reinforced (DN10-50)
G17 PVC-C Threaded socket NPT
G40 PE-100 Butt fusion metric
G41 PE-100 Butt fusion spigot SDR11 metric
G42 PE-100 Butt fusion spigot SDR17.6 metric (DN65-100)
G43 PE-100 Butt fusion spigot long SDR11 metric
G72 Backing flange PP-steel metric
G73 Backing flange PP-steel inch ANSI
G81 PVC-C Valve end blank

Multi-functional module
I01 No multi-functional module
I02 Empty module
I03 Module with 2 limit switches Ag, Ni
I04 Module with 2 limit switches Au
I05 Module with 2 inductive switches Namur
I06 Module with 2 inductive switches PNP
I07 Module with 2 inductive switches NPN

Lever
K01 Standard handle red
K02 Standard handle black
K11 Multi-functional handle red

Mounting plate
L01 without mounting plate
L02 with mounting plate

A01	B02	C	D	E	F	G	G	I	K	L
						left	right			

Copiable

GF ball valve type 546 with pneumatic actuator

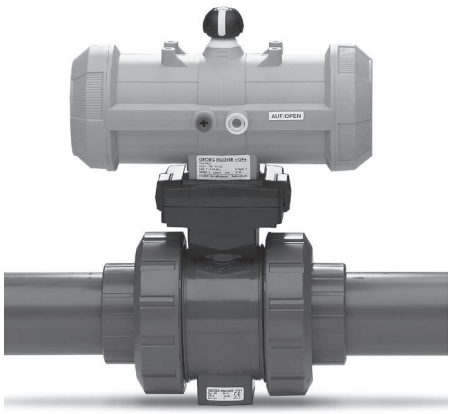

It's so easy to actuate the type 546:
With the configurator, you have a choice of new pneumatic actuators PA11 and PA21 in 2 optimized sizes including a large range of accessories.

We supply what you put together.

Pneumatic actuators PA11/PA21
P01 Fail safe to close PA11/PA21
P02 Fail safe to open PA11/21
P03 Double acting PA11/21
P30 Fail safe to close PA30/90
P31 Fail safe to open PA30/90
P32 Double acting PA30/90

Manual override
Q01 Without manual override
Q02 With manual override

Stroke limiter
R01 Without stroke limiter
R02 With stroke limiter

P	Q	R	

Ball valves pneumatic

230

DN10/15 - 50

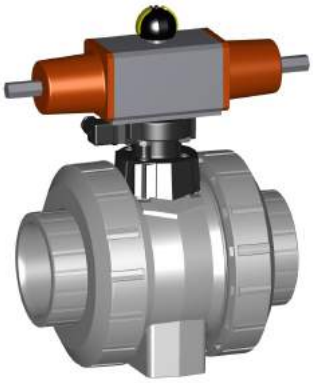

Ball valve type 230 PVC-C FC (Fail safe to close)
Without manual override
With solvent cement sockets metric

Model:

- Control time 90°<) 1-2 s
- Assignment of actuators: PA11 (DN10/15-25), PA21 (DN32-50), PA30 (DN65), PA40 (DN80), PA40 (DN100)
- For easy installation and removal
- Integrated stainless steel mounting inserts

Option:

- Individual configuration of the valve (see diagram)

d [mm]	DN [mm]	PN [bar]	kv-value (Δp=1 bar) [l/min]	EPDM Code	SP	Weight [kg]	FPM Code	SP	Weight [kg]
16	10	10	70	**199 230 522**	1	1.159	**199 230 532**	1	1.159
20	15	10	185	**199 230 523**	1	1.553	**199 230 533**	1	1.159
25	20	10	350	**199 230 524**	1	1.276	**199 230 534**	1	1.276
32	25	10	700	**199 230 525**	1	1.400	**199 230 535**	1	1.262
40	32	10	1000	**199 230 526**	1	2.451	**199 230 536**	1	2.226
50	40	10	1600	**199 230 527**	1	2.773	**199 230 537**	1	2.773
63	50	10	3100	**199 230 528**	1	3.250	**199 230 538**	1	3.631
75	65	10	5000	**199 230 529**	1	8.100	**199 230 539**	1	8.100
90	80	10	7000	**199 230 530**	1	10.800	**199 230 540**	1	10.800
110	100	10	11000	**199 230 531**	1	16.500	**199 230 541**	1	16.500

d [mm]	D [mm]	H [mm]	H1 [mm]	H2 [mm]	H5 [mm]	L [mm]	L1 [mm]	L2 [mm]	L4 [mm]	L5 [mm]	L6 [mm]	L7 [mm]	z [mm]	closest inch [inch]
16	50	159	27	62	77	92	194	56	25	261	76	48	64	⅜
20	50	159	27	62	77	95	194	56	25	261	76	48	64	½
25	58	168	30	71	77	110	194	65	25	261	76	48	72	¾
32	68	168	36	71	77	123	194	71	25	261	76	48	79	1
40	84	202	44	84	99	146	224	85	45	305	95	59	94	1 ¼
50	97	202	51	84	99	157	224	89	45	305	95	59	95	1 ½
63	124	225	64	106	99	183	224	101	45	305	95	59	107	2
75	166	262	85	156	70	233		136	70	276	65		144	2 ½
90	200	281	105	168	78	254		141	70	341	72		151	3
110	238	292	123	175	86	301		164	120	369	80		174	4

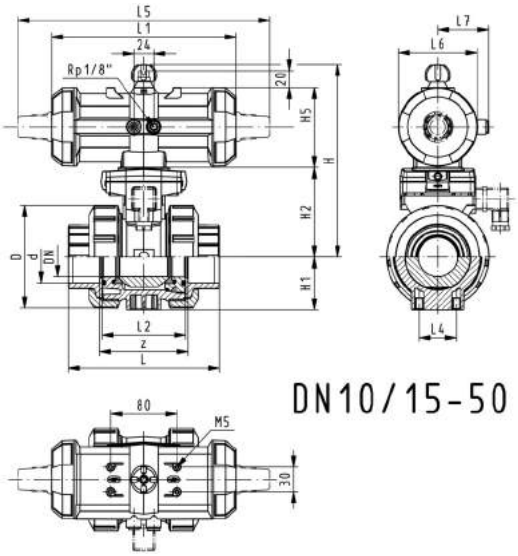

DN10/15-50

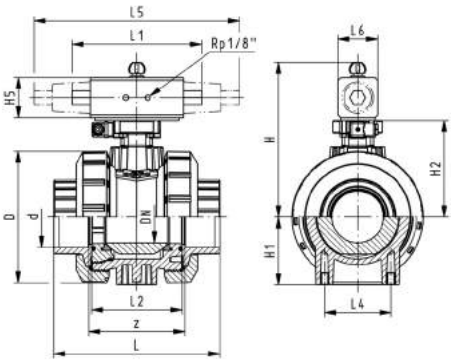

DN65-100

PF 3 39 696 032

DN10/15 - 50

Ball valve type 230 PVC-C FC (fail safe to close)
With manual override
With solvent cement sockets metric

Model:

- Built on with pneumatic actuator PA11 (DN10/15-25), PA21 (DN32-50)
- Control time 90°<) 1-2 s
- For easy installation and removal
- Integrated stainless steel mounting inserts

Option:

- Individual configuration of the valve (see diagram)

d [mm]	DN [mm]	PN [bar]	kv-value (Δp=1 bar) [l/min]	EPDM Code	SP	Weight [kg]	FPM Code	SP	Weight [kg]
16	10	10	70	**199 230 402**	1	1.459	**199 230 412**	1	1.459
20	15	10	185	**199 230 403**	1	1.459	**199 230 413**	1	1.459
25	20	10	350	**199 230 404**	1	1.576	**199 230 414**	1	1.576
32	25	10	700	**199 230 405**	1	1.700	**199 230 415**	1	1.496
40	32	10	1000	**199 230 406**	1	2.477	**199 230 416**	1	2.751
50	40	10	1600	**199 230 407**	1	3.073	**199 230 417**	1	2.736
63	50	10	3100	**199 230 408**	1	4.471	**199 230 418**	1	3.530

d [mm]	D [mm]	H [mm]	H1 [mm]	H2 [mm]	H3 [mm]	H4 [mm]	H5 [mm]	L [mm]	L1 [mm]	L2 [mm]	L4 [mm]	L5 [mm]	L6 [mm]	L7 [mm]	z [mm]
16	50	230	27	62	168	40	77	92	194	56	25	261	76	48	64
20	50	230	27	62	168	40	77	95	194	56	25	261	76	48	64
25	58	239	30	71	168	40	77	110	194	65	25	261	76	48	72
32	68	239	36	71	168	40	77	123	194	71	25	261	76	48	79
40	84	271	44	84	187	51	99	146	224	85	45	305	95	59	94
50	97	271	51	84	187	51	99	157	224	89	45	305	95	59	95
63	124	293	64	106	187	51	99	183	224	101	45	305	95	59	107

d [mm]	closest inch [inch]
16	⅜
20	½
25	¾
32	1
40	1 ¼
50	1 ½
63	2

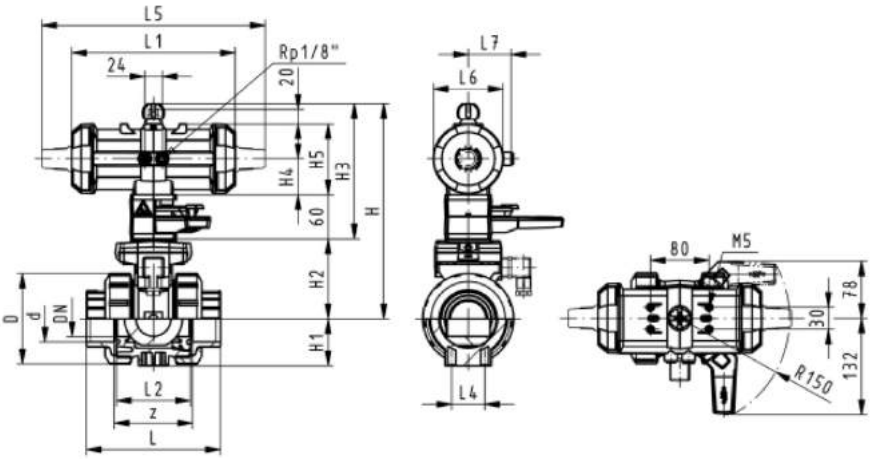

PF 3 39 696 032

DN10/15 - 50

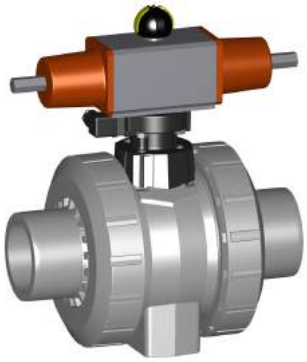

Ball valve type 230 PVC-C FC (Fail safe to close)
Without manual override
With solvent cement spigots metric

Model:

- Control time 90°<) 1-2 s
- Assignment of actuators: PA11 (DN10/15-25), PA21 (DN32-50), PA30 (DN65), PA40 (DN80), PA40 (DN100)
- For easy installation and removal
- Integrated stainless steel mounting inserts

Option:

- Individual configuration of the valve (see diagram)

d [mm]	DN [mm]	PN [bar]	kv-value (Δp=1 bar) [l/min]	EPDM Code	SP	Weight [kg]	FPM Code	SP	Weight [kg]
16	10	10	70	**199 230 542**	1	1.159	**199 230 552**	1	1.159
20	15	10	185	**199 230 543**	1	1.159	**199 230 553**	1	1.159
25	20	10	350	**199 230 544**	1	1.276	**199 230 554**	1	1.276
32	25	10	700	**199 230 545**	1	1.400	**199 230 555**	1	1.400
40	32	10	1000	**199 230 546**	1	2.451	**199 230 556**	1	2.451
50	40	10	1600	**199 230 547**	1	2.773	**199 230 557**	1	2.773
63	50	10	3100	**199 230 548**	1	3.314	**199 230 558**	1	3.631
75	65	10	5000	**199 230 549**	1	8.300	**199 230 559**	1	8.300
90	80	10	7000	**199 230 550**	1	11.000	**199 230 560**	1	11.000
110	100	10	11000	**199 230 551**	1	16.700	**199 230 561**	1	16.700

d [mm]	D [mm]	H [mm]	H1 [mm]	H2 [mm]	H5 [mm]	L [mm]	L1 [mm]	L2 [mm]	L3 [mm]	L4 [mm]	L5 [mm]	L6 [mm]	L7 [mm]	closest inch [inch]
16	50	159	27	62	77	114	194	56	0	25	261	76	48	⅜
20	50	159	27	62	77	124	194	56	130	25	261	76	48	½
25	58	168	30	71	77	144	194	65	150	25	261	76	48	¾
32	68	168	36	71	77	154	194	71	160	25	261	76	48	1
40	84	202	44	84	99	174	224	85	180	45	305	95	59	1 ¼
50	97	202	51	84	99	194	224	89	200	45	305	95	59	1 ½
63	124	225	64	106	99	224	224	101	230	45	305	95	59	2
75	166	262	85	156	70	284		136	290	70	276	65		2 ½
90	200	281	105	168	78	300		141	310	70	341	72		3
110	238	292	123	175	86	340		164	350	120	369	80		4

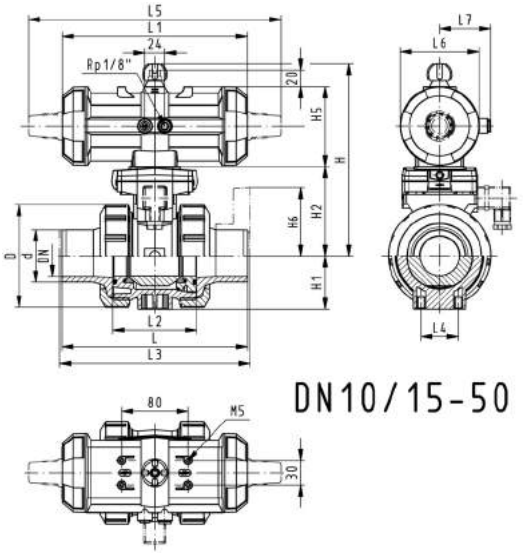

DN10/15-50

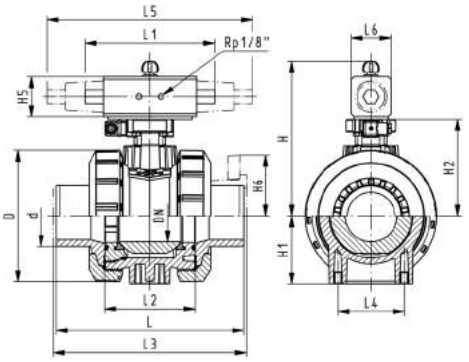

DN65-100

PF 3 39 696 032

DN10/15 - 50

Ball valve type 230 PVC-C FC (fail safe to close)
With manual override
With solvent cement spigots metric

Model:

- Built on with pneumatic actuator PA11 (DN10/15-25), PA21 (DN32-50)
- Control time 90°<) 1-2 s
- For easy installation and removal
- Integrated stainless steel mounting inserts

Option:

- Individual configuration of the valve (see diagram)

d [mm]	DN [mm]	PN [bar]	kv-value (Δp=1 bar) [l/min]	EPDM Code	SP	Weight [kg]	FPM Code	SP	Weight [kg]
16	10	10	70	**199 230 422**	1	1.459	**199 230 432**	1	1.459
20	15	10	185	**199 230 423**	1	1.459	**199 230 433**	1	1.459
25	20	10	350	**199 230 424**	1	1.576	**199 230 434**	1	1.576
32	25	10	700	**199 230 425**	1	1.700	**199 230 435**	1	1.700
40	32	10	1000	**199 230 426**	1	2.751	**199 230 436**	1	2.751
50	40	10	1600	**199 230 427**	1	3.073	**199 230 437**	1	3.073
63	50	10	3100	**199 230 428**	1	3.931	**199 230 438**	1	3.931

d [mm]	D [mm]	H [mm]	H1 [mm]	H2 [mm]	H3 [mm]	H4 [mm]	H5 [mm]	L [mm]	L1 [mm]	L2 [mm]	L3 [mm]	L4 [mm]	L5 [mm]	L6 [mm]	L7 [mm]
16	50	159	27	62	168	40	77	114	194	56	130	25	261	76	48
20	50	159	27	62	168	40	77	124	194	56	130	25	261	76	48
25	58	168	30	71	168	40	77	144	194	65	150	25	261	76	48
32	68	168	36	71	168	40	77	154	194	71	160	25	261	76	48
40	84	202	44	84	187	51	99	174	224	85	180	45	305	95	59
50	97	202	51	84	187	51	99	194	224	89	200	45	305	95	59
63	124	225	64	106	187	51	99	224	224	101	230	45	305	95	59

d [mm]	closest inch [inch]
16	⅜
20	½
25	¾
32	1
40	1 ¼
50	1 ½
63	2

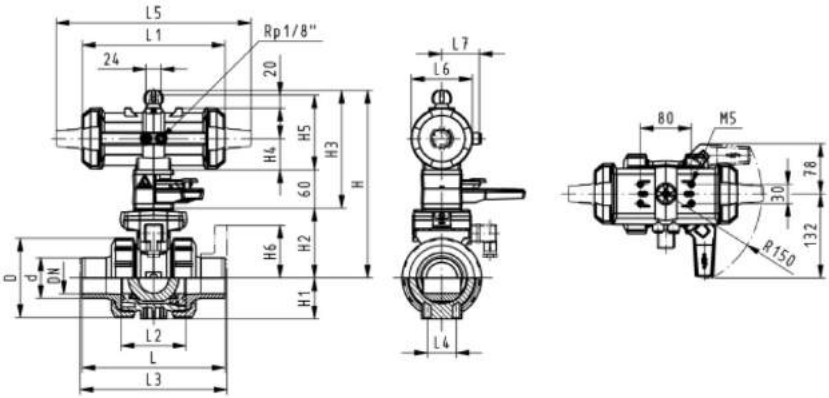

PF 3 39 696 032

DN10/15 - 50

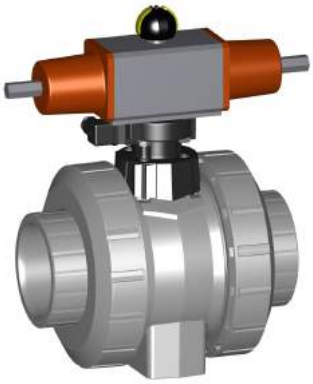

Ball valve type 230 PVC-C FC (Fail safe to close)
Without manual override
With threaded sockets Rp

Model:

- Control time 90°<) 1-2 s
- Assignment of actuators: PA11 (DN10/15-25), PA21 (DN32-50), PA30 (DN65), PA40 (DN80), PA40 (DN100)
- For easy installation and removal
- Integrated stainless steel mounting inserts

Option:

- Individual configuration of the valve (see diagram)

Rp [inch]	DN [mm]	PN [bar]	kv-value (Δp=1 bar) [l/min]	EPDM Code	SP	Weight [kg]	FPM Code	SP	Weight [kg]
⅜	10	10	70	**199 230 872**	1	1.200	**199 230 892**	1	1.200
½	15	10	185	**199 230 873**	1	1.200	**199 230 893**	1	1.200
¾	20	10	350	**199 230 874**	1	1.300	**199 230 894**	1	1.300
1	25	10	700	**199 230 875**	1	1.400	**199 230 895**	1	1.400
1 ¼	32	10	1000	**199 230 876**	1	2.500	**199 230 896**	1	2.500
1 ½	40	10	1600	**199 230 877**	1	2.800	**199 230 897**	1	2.800
2	50	10	3100	**199 230 878**	1	3.700	**199 230 898**	1	3.700
2 ½	65	10	5000	**199 230 879**	1	8.200	**199 230 899**	1	8.200
3	80	10	7000	**199 230 880**	1	11.000	**199 230 900**	1	11.000
4	100	10	11000	**199 230 881**	1	16.500	**199 230 901**	1	16.500

Rp [inch]	D [mm]	H [mm]	H1 [mm]	H2 [mm]	H5 [mm]	L [mm]	L1 [mm]	L2 [mm]	L4 [mm]	L5 [mm]	L6 [mm]	L7 [mm]	z [mm]
⅜	50	159	27	62	77	92	194	56	25	261	76	48	64
½	50	159	27	62	77	95	194	56	25	261	76	48	64
¾	58	168	30	71	77	110	194	65	25	261	76	48	72
1	68	168	36	71	77	123	194	71	25	261	76	48	79
1 ¼	84	202	44	84	99	146	224	85	45	305	95	59	94
1 ½	97	202	51	84	99	157	224	89	45	305	95	59	95
2	124	225	64	106	99	183	224	101	45	305	95	59	107
2 ½	166	262	85	156	70	233		136	70	276	65		144
3	200	281	105	168	78	254		141	70	341	72		151
4	238	292	123	175	86	301		164	120	369	80		174

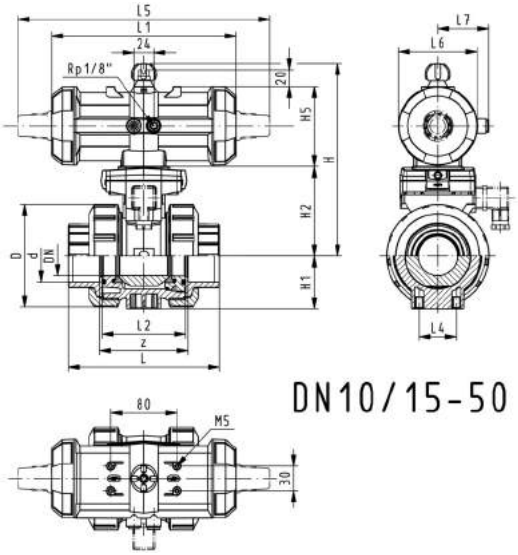

DN10/15-50

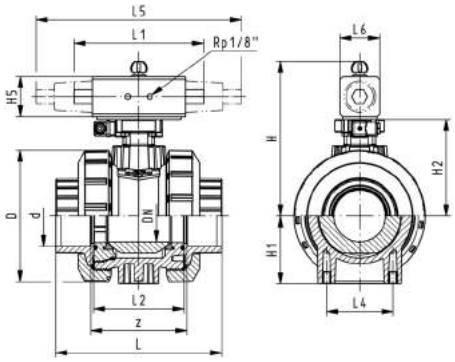

DN65-100

PF 3 39 696 032

DN10/15 - 50

Ball valve type 230 PVC-C FC (fail safe to close)
With manual override
With threaded sockets Rp

Model:

- Built on with pneumatic actuator PA11 (DN10/15-25), PA21 (DN32-50)
- Control time 90°<) 1-2 s
- For easy installation and removal
- Integrated stainless steel mounting inserts

Option:

- Individual configuration of the valve (see diagram)

Rp [inch]	DN [mm]	PN [bar]	kv-value (Δp=1 bar) [l/min]	EPDM Code	SP	Weight [kg]	FPM Code	SP	Weight [kg]
⅜	10	10	70	**199 230 752**	1	1.500	**199 230 772**	1	1.500
½	15	10	185	**199 230 753**	1	1.500	**199 230 773**	1	1.500
¾	20	10	350	**199 230 754**	1	1.600	**199 230 774**	1	1.600
1	25	10	700	**199 230 755**	1	1.700	**199 230 775**	1	1.700
1 ¼	32	10	1000	**199 230 756**	1	2.800	**199 230 776**	1	2.800
1 ½	40	10	1600	**199 230 757**	1	3.100	**199 230 777**	1	3.100
2	50	10	3100	**199 230 758**	1	4.000	**199 230 778**	1	4.000

Rp [inch]	D [mm]	H [mm]	H1 [mm]	H2 [mm]	H3 [mm]	H4 [mm]	H5 [mm]	L [mm]	L1 [mm]	L2 [mm]	L4 [mm]	L5 [mm]	L6 [mm]	L7 [mm]	z [mm]
⅜	50	159	27	62	168	40	77	92	194	56	25	261	76	48	64
½	50	159	27	62	168	40	77	95	194	56	25	261	76	48	64
¾	58	168	30	71	168	40	77	110	194	65	25	261	76	48	72
1	68	168	36	71	168	40	77	123	194	71	25	261	76	48	79
1 ¼	84	202	44	84	187	51	99	146	224	85	45	305	95	59	94
1 ½	97	202	51	84	187	51	99	157	224	89	45	305	95	59	95
2	124	225	64	106	187	51	99	183	224	101	45	305	95	59	107

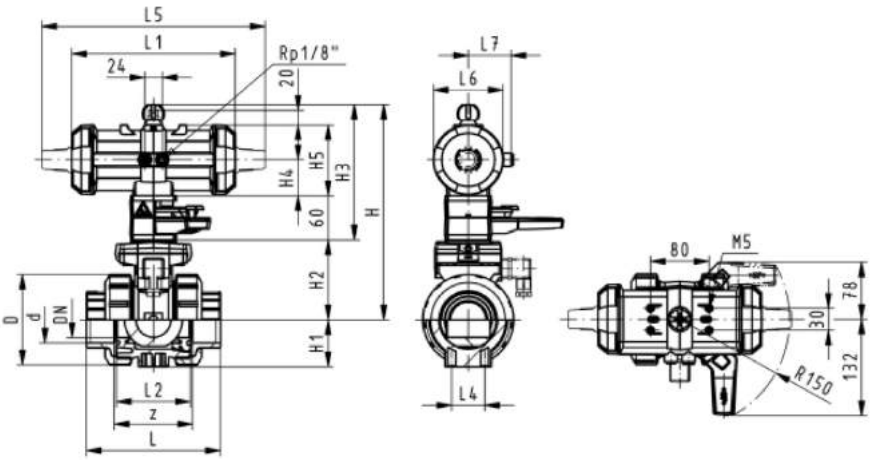

PF 3 39 696 032

Ball valve type 230 PVC-C FC (Fail safe to close)
Without manual override
With backing flanges PP-st metric

Model:

- Control time 90°<) 1-2 s
- Assignment of actuators: PA11 (DN10/15-25), PA21 (DN32-50), PA30 (DN65), PA40 (DN80), PA40 (DN100)
- For easy installation and removal
- Integrated stainless steel mounting inserts
- Overall length according to EN 558
- Connecting dimesnsion: ISO 7005, EN 1092, BS 4504, DIN 2501

Option:

- Individual configuration of the valve (see diagram)

d [mm]	DN [mm]	PN [bar]	kv-value (Δp=1 bar) [l/min]	EPDM Code	SP	Weight [kg]	FPM Code	SP	Weight [kg]
75	65	10	5000	**199 234 609**	1	12.300	**199 234 619**	1	12.300
90	80	10	7000	**199 234 610**	1	15.800	**199 234 620**	1	15.800
110	100	10	11000	**199 234 611**	1	23.200	**199 234 621**	1	23.200

d [mm]	D [mm]	H [mm]	H1 [mm]	H2 [mm]	H5 [mm]	H6 [mm]	L [mm]	L2 [mm]	L3 [mm]	L4 [mm]	L5 [mm]	L6 [mm]
75	166	262	85	156	70	93	284	136	290	70	276	65
90	200	281	105	168	78	100	300	141	310	70	341	72
110	238	292	123	175	86	110	340	164	350	120	369	80

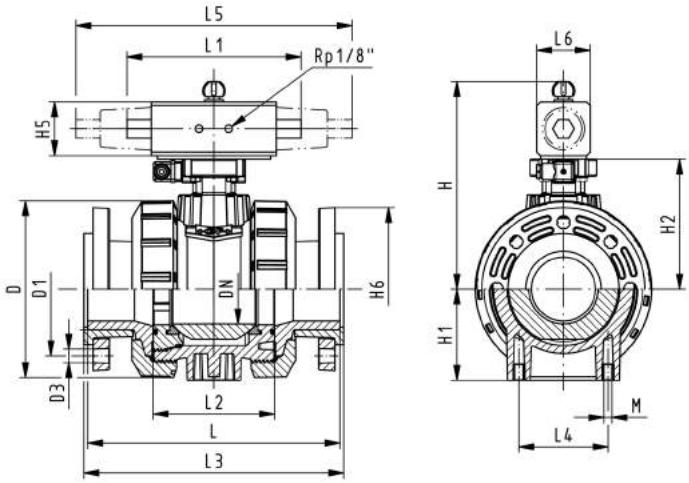

PF 3 39 696 032

DN10/15 - 50

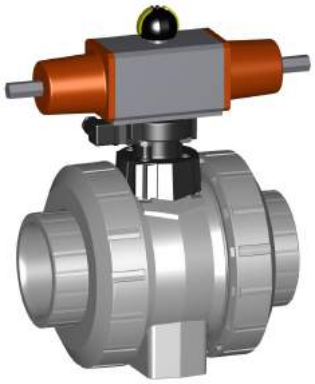

Ball valve type 230 PVC-C FO (Fail safe to open)
Without manual override
With solvent cement sockets metric

Model:

- Control time 90°<) 1-2 s
- Assignment of actuators: PA11 (DN10/15-25), PA21 (DN32-50), PA30 (DN65), PA40 (DN80), PA40 (DN100)
- For easy installation and removal
- Integrated stainless steel mounting inserts

Option:

- Individual configuration of the valve (see diagram)

d [mm]	DN [mm]	PN [bar]	kv-value (Δp=1 bar) [l/min]	EPDM Code	SP	Weight [kg]	FPM Code	SP	Weight [kg]
16	10	10	70	**199 230 562**	1	1.159	**199 230 572**	1	1.159
20	15	10	185	**199 230 563**	1	1.159	**199 230 573**	1	1.159
25	20	10	350	**199 230 564**	1	1.276	**199 230 574**	1	1.276
32	25	10	700	**199 230 565**	1	1.400	**199 230 575**	1	1.400
40	32	10	1000	**199 230 566**	1	2.451	**199 230 576**	1	2.451
50	40	10	1600	**199 230 567**	1	2.773	**199 230 577**	1	2.773
63	50	10	3100	**199 230 568**	1	3.631	**199 230 578**	1	3.631
75	65	10	5000	**199 230 569**	1	8.100	**199 230 579**	1	8.100
90	80	10	7000	**199 230 570**	1	10.800	**199 230 580**	1	10.800
110	100	10	11000	**199 230 571**	1	16.500	**199 230 581**	1	16.500

d [mm]	D [mm]	H [mm]	H1 [mm]	H2 [mm]	H5 [mm]	L [mm]	L1 [mm]	L2 [mm]	L4 [mm]	L5 [mm]	L6 [mm]	L7 [mm]	z [mm]	closest inch [inch]
16	50	159	27	62	77	92	194	56	25	261	76	48	64	⅜
20	50	159	27	62	77	95	194	56	25	261	76	48	64	½
25	58	168	30	71	77	110	194	65	25	261	76	48	72	¾
32	68	168	36	71	77	123	194	71	25	261	76	48	79	1
40	84	202	44	84	99	146	224	85	45	305	95	59	94	1 ¼
50	97	202	51	84	99	157	224	89	45	305	95	59	95	1 ½
63	124	225	64	106	99	183	224	101	45	305	95	59	107	2
75	166	262	85	156	70	233		136	70	276	65		144	2 ½
90	200	281	105	168	78	254		141	70	341	72		151	3
110	238	292	123	175	86	301		164	120	369	80		174	4

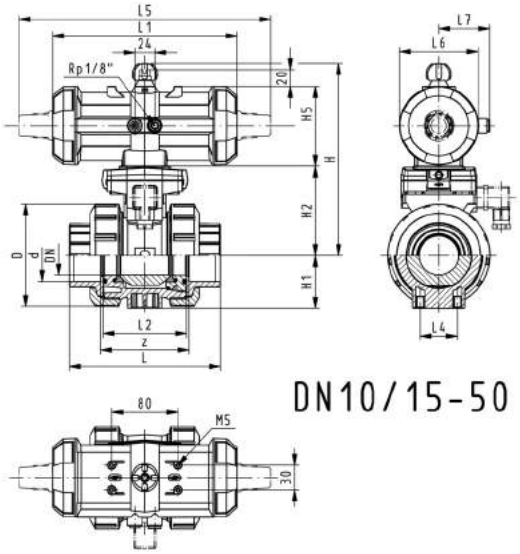

DN10/15-50

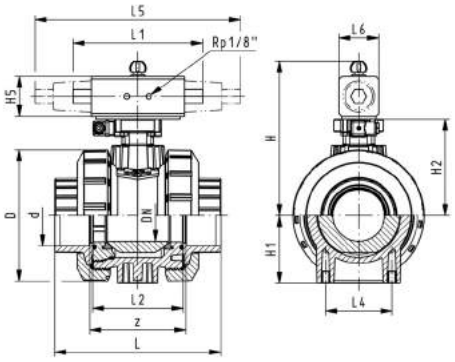

DN65-100

PF 3 39 696 032

DN10/15 - 50

Ball valve type 230 PVC-C FO (Fail safe to open)
With manual override
With solvent cement sockets metric

Model:

- Built on with pneumatic actuator PA11 (DN10/15-25), PA21 (DN32-50)
- Control time 90°<) 1-2 s
- For easy installation and removal
- Integrated stainless steel mounting inserts

Option:

- Individual configuration of the valve (see diagram)

d [mm]	DN [mm]	PN [bar]	kv-value (Δp=1 bar) [l/min]	EPDM Code	SP	Weight [kg]	FPM Code	SP	Weight [kg]
16	10	10	70	**199 230 442**	1	1.459	**199 230 452**	1	1.149
20	15	10	185	**199 230 443**	1	1.459	**199 230 453**	1	1.459
25	20	10	350	**199 230 444**	1	1.576	**199 230 454**	1	1.576
32	25	10	700	**199 230 445**	1	1.700	**199 230 455**	1	1.700
40	32	10	1000	**199 230 446**	1	2.751	**199 230 456**	1	2.751
50	40	10	1600	**199 230 447**	1	3.073	**199 230 457**	1	3.073
63	50	10	3100	**199 230 448**	1	3.931	**199 230 458**	1	3.931

d [mm]	D [mm]	H [mm]	H1 [mm]	H2 [mm]	H3 [mm]	H4 [mm]	H5 [mm]	L [mm]	L1 [mm]	L2 [mm]	L4 [mm]	L5 [mm]	L6 [mm]	L7 [mm]	z [mm]
16	50	230	27	62	168	40	77	92	194	56	25	261	76	48	64
20	50	230	27	62	168	40	77	95	194	56	25	261	76	48	64
25	58	239	30	71	168	40	77	110	194	65	25	261	76	48	72
32	68	239	36	71	168	40	77	123	194	71	25	261	76	48	79
40	84	271	44	84	187	51	99	146	224	85	45	305	95	59	94
50	97	271	51	84	187	51	99	157	224	89	45	305	95	59	95
63	124	293	64	106	187	51	99	183	224	101	45	305	95	59	107

d [mm]	closest inch [inch]
16	⅜
20	½
25	¾
32	1
40	1 ¼
50	1 ½
63	2

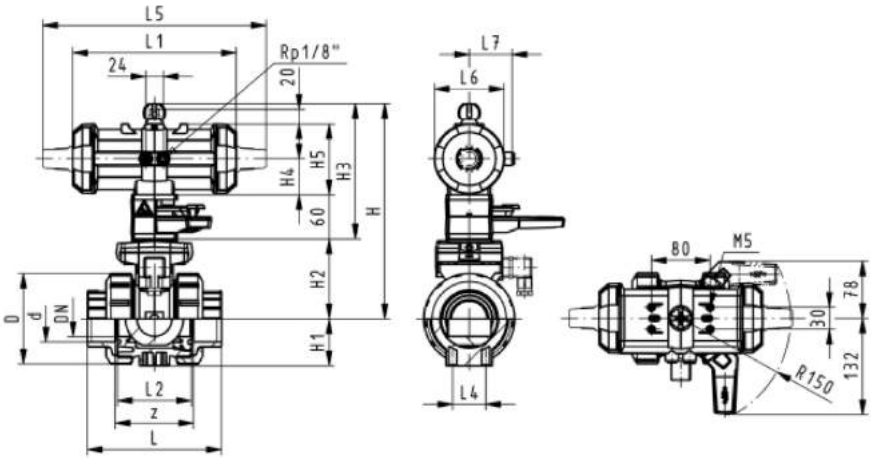

PF 3 39 696 032

DN10/15 - 50

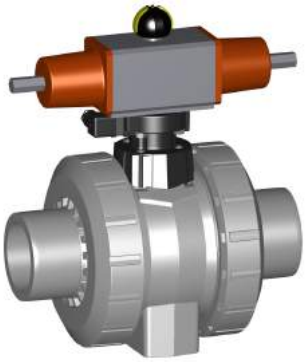

Ball valve type 230 PVC-C FO (Fail safe to open)
Without manual override
With solvent cement spigots metric

Model:

- Control time 90°<) 1-2 s
- Assignment of actuators: PA11 (DN10/15-25), PA21 (DN32-50), PA30 (DN65), PA40 (DN80), PA40 (DN100)
- For easy installation and removal
- Integrated stainless steel mounting inserts

Option:

- Individual configuration of the valve (see diagram)

d [mm]	DN [mm]	PN [bar]	kv-value (Δp=1 bar) [l/min]	EPDM Code	SP	Weight [kg]	FPM Code	SP	Weight [kg]
16	10	10	70	**199 230 582**	1	1.159	**199 230 592**	1	1.159
20	15	10	185	**199 230 583**	1	1.159	**199 230 593**	1	1.159
25	20	10	350	**199 230 584**	1	1.276	**199 230 594**	1	1.276
32	25	10	700	**199 230 585**	1	1.400	**199 230 595**	1	1.400
40	32	10	1000	**199 230 586**	1	2.451	**199 230 596**	1	2.451
50	40	10	1600	**199 230 587**	1	2.773	**199 230 597**	1	2.773
63	50	10	3100	**199 230 588**	1	3.631	**199 230 598**	1	3.631
75	65	10	5000	**199 230 589**	1	8.300	**199 230 599**	1	8.300
90	80	10	7000	**199 230 590**	1	11.000	**199 230 600**	1	11.000
110	100	10	11000	**199 230 591**	1	16.700	**199 230 601**	1	16.700

d [mm]	D [mm]	H [mm]	H1 [mm]	H2 [mm]	H5 [mm]	L [mm]	L1 [mm]	L2 [mm]	L3 [mm]	L4 [mm]	L5 [mm]	L6 [mm]	L7 [mm]	closest inch [inch]
16	50	159	27	62	77	114	194	56	130	25	261	76	48	⅜
20	50	159	27	62	77	124	194	56	130	25	261	76	48	½
25	58	168	30	71	77	144	194	65	150	25	261	76	48	¾
32	68	168	36	71	77	154	194	71	160	25	261	76	48	1
40	84	202	44	84	99	174	224	85	180	45	305	95	59	1 ¼
50	97	202	51	84	99	194	224	89	200	45	305	95	59	1 ½
63	124	225	64	106	99	224	224	101	230	45	305	95	59	2
75	166	262	85	156	70	284		136	290	70	276	65		2 ½
90	200	281	105	168	78	300		141	310	70	341	72		3
110	238	292	123	175	86	340		164	350	120	369	80		4

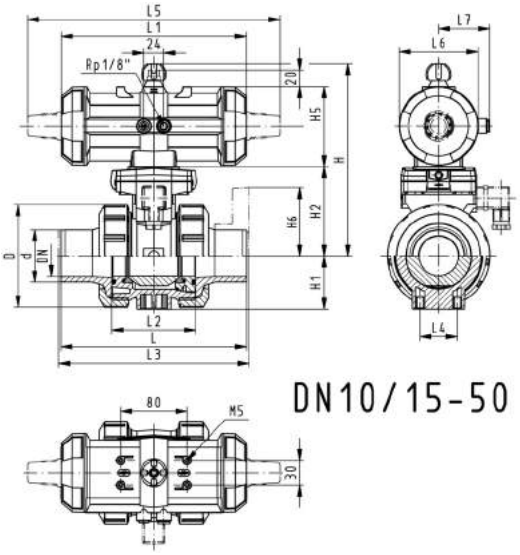

DN10/15-50

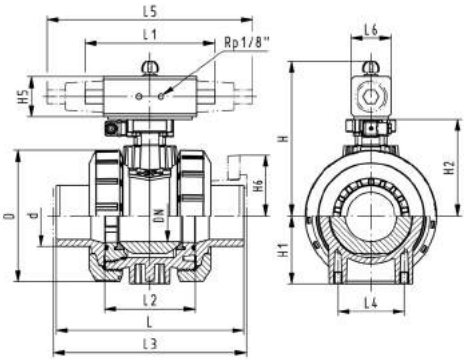

DN65-100

PF 3 39 696 032

DN10/15 - 50

Ball valve type 230 PVC-C FO (Fail safe to open)
With manual override
With solvent cement spigots metric

Model:

- Built on with pneumatic actuator PA11 (DN10/15-25), PA21 (DN32-50)
- Control time 90°<) 1-2 s
- For easy installation and removal
- Integrated stainless steel mounting inserts

Option:

- Individual configuration of the valve (see diagram)

d [mm]	DN [mm]	PN [bar]	kv-value (Δp=1 bar) [l/min]	EPDM Code	SP	Weight [kg]	FPM Code	SP	Weight [kg]
16	10	10	70	**199 230 462**	1	1.459	**199 230 472**	1	1.459
20	15	10	185	**199 230 463**	1	1.459	**199 230 473**	1	1.459
25	20	10	350	**199 230 464**	1	1.576	**199 230 474**	1	1.576
32	25	10	700	**199 230 465**	1	1.700	**199 230 475**	1	1.700
40	32	10	1000	**199 230 466**	1	2.751	**199 230 476**	1	2.751
50	40	10	1600	**199 230 467**	1	3.073	**199 230 477**	1	3.073
63	50	10	3100	**199 230 468**	1	3.931	**199 230 478**	1	3.931

d [mm]	D [mm]	H [mm]	H1 [mm]	H2 [mm]	H3 [mm]	H4 [mm]	H5 [mm]	L [mm]	L1 [mm]	L2 [mm]	L3 [mm]	L4 [mm]	L5 [mm]	L6 [mm]	L7 [mm]
16	50	159	27	62	168	40	77	114	194	56	130	25	261	76	48
20	50	159	27	62	168	40	77	124	194	56	130	25	261	76	48
25	58	168	30	71	168	40	77	144	194	65	150	25	261	76	48
32	68	168	36	71	168	40	77	154	194	71	160	25	261	76	48
40	84	202	44	84	187	51	99	174	224	85	180	45	305	95	59
50	97	202	51	84	187	51	99	194	224	89	200	45	305	95	59
63	124	225	64	106	187	51	99	224	224	101	230	45	305	95	59

d [mm]	closest inch [inch]
16	⅜
20	½
25	¾
32	1
40	1 ¼
50	1 ½
63	2

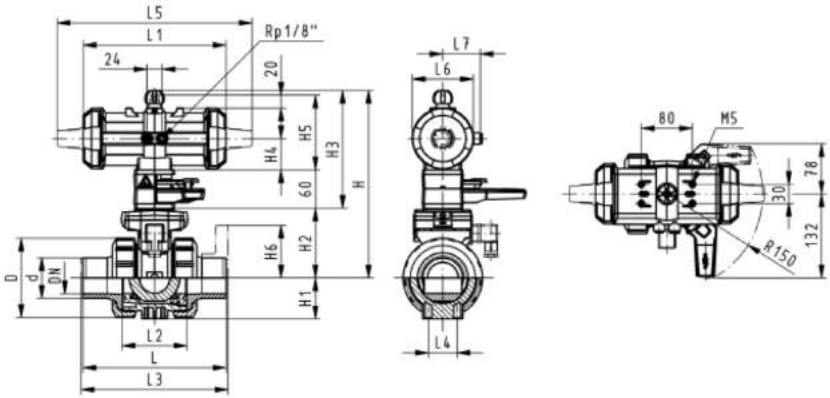

PF 3 39 696 032

DN10/15 - 50

Ball valve type 230 PVC-C FO (Fail safe to open)
Without manual override
With threaded sockets Rp

Model:

- Control time 90°<) 1-2 s
- Assignment of actuators: PA11 (DN10/15-25), PA21 (DN32-50), PA30 (DN65), PA40 (DN80), PA40 (DN100)
- For easy installation and removal
- Integrated stainless steel mounting inserts

Option:

- Individual configuration of the valve (see diagram)

Rp [inch]	DN [mm]	PN [bar]	kv-value (Δp=1 bar) [l/min]	EPDM Code	SP	Weight [kg]	FPM Code	SP	Weight [kg]
⅜	10	10	70	**199 230 912**	1	1.200	**199 230 932**	1	1.200
½	15	10	185	**199 230 913**	1	1.200	**199 230 933**	1	1.200
¾	20	10	350	**199 230 914**	1	1.300	**199 230 934**	1	1.300
1	25	10	700	**199 230 915**	1	1.400	**199 230 935**	1	1.400
1 ¼	32	10	1000	**199 230 916**	1	2.500	**199 230 936**	1	2.500
1 ½	40	10	1600	**199 230 917**	1	2.800	**199 230 937**	1	2.800
2	50	10	3100	**199 230 918**	1	3.700	**199 230 938**	1	3.700
2 ½	65	10	5000	**199 230 919**	1	8.200	**199 230 939**	1	8.200
3	80	10	7000	**199 230 920**	1	11.000	**199 230 940**	1	11.000
4	100	10	11000	**199 230 921**	1	16.500	**199 230 941**	1	16.500

Rp [inch]	D [mm]	H [mm]	H1 [mm]	H2 [mm]	H5 [mm]	L [mm]	L1 [mm]	L2 [mm]	L4 [mm]	L5 [mm]	L6 [mm]	L7 [mm]	z [mm]
⅜	50	159	27	62	77	92	194	56	25	261	76	48	64
½	50	159	27	62	77	95	194	56	25	261	76	48	64
¾	58	168	30	71	77	110	194	65	25	261	76	48	72
1	68	168	36	71	77	123	194	71	25	261	76	48	79
1 ¼	84	202	44	84	99	146	224	85	45	305	95	59	94
1 ½	97	202	51	84	99	157	224	89	45	305	95	59	95
2	124	225	64	106	99	183	224	101	45	305	95	59	107
2 ½	166	262	85	156	70	233		136	70	276	65		144
3	200	281	105	168	78	254		141	70	341	72		151
4	238	292	123	175	86	301		164	120	369	80		174

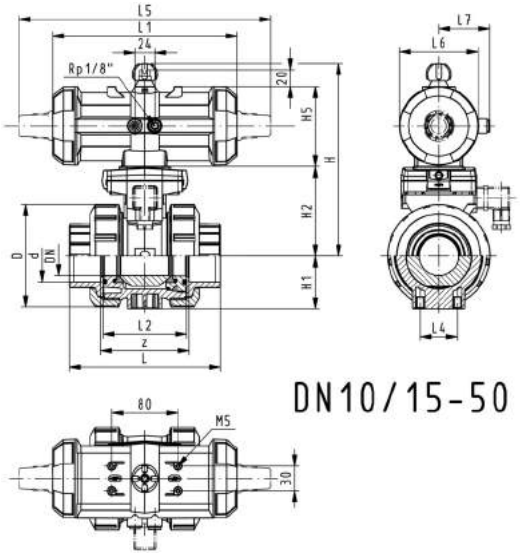

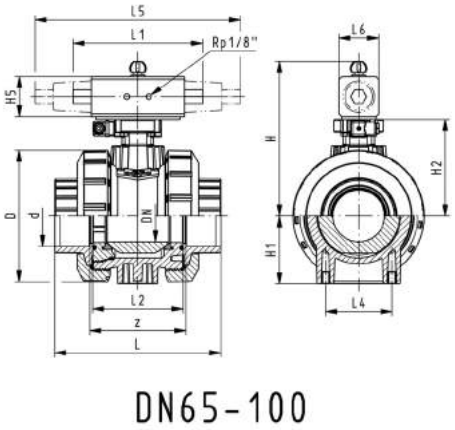

PF 3 39 696 032

DN10/15 - 50

Ball valve type 230 PVC-C FO (Fail safe to open)
With manual override
With threaded sockets Rp

Model:

- Built on with pneumatic actuator PA11 (DN10/15-25), PA21 (DN32-50)
- Control time 90°<) 1-2 s
- For easy installation and removal
- Integrated stainless steel mounting inserts

Option:

- Individual configuration of the valve (see diagram)

Rp [inch]	DN [mm]	PN [bar]	kv-value (Δp=1 bar) [l/min]	EPDM Code	SP	Weight [kg]	FPM Code	SP	Weight [kg]
⅜	10	10	70	**199 230 792**	1	1.500	**199 230 812**	1	1.500
½	15	10	185	**199 230 793**	1	1.500	**199 230 813**	1	1.500
¾	20	10	350	**199 230 794**	1	1.600	**199 230 814**	1	1.600
1	25	10	700	**199 230 795**	1	1.700	**199 230 815**	1	1.700
1 ¼	32	10	1000	**199 230 796**	1	2.800	**199 230 816**	1	2.800
1 ½	40	10	1600	**199 230 797**	1	3.100	**199 230 817**	1	3.100
2	50	10	3100	**199 230 798**	1	4.000	**199 230 818**	1	4.000

Rp [inch]	D [mm]	H [mm]	H1 [mm]	H2 [mm]	H3 [mm]	H4 [mm]	H5 [mm]	L [mm]	L1 [mm]	L2 [mm]	L4 [mm]	L5 [mm]	L6 [mm]	L7 [mm]	z [mm]
⅜	50	159	27	62	168	40	77	92	194	56	25	261	76	48	64
½	50	159	27	62	168	40	77	95	194	56	25	261	76	48	64
¾	58	168	30	71	168	40	77	110	194	65	25	261	76	48	72
1	68	168	36	71	168	40	77	123	194	71	25	261	76	48	79
1 ¼	84	202	44	84	187	51	99	146	224	85	45	305	95	59	94
1 ½	97	202	51	84	187	51	99	157	224	89	45	305	95	59	95
2	124	225	64	106	187	51	99	183	224	101	45	305	95	59	107

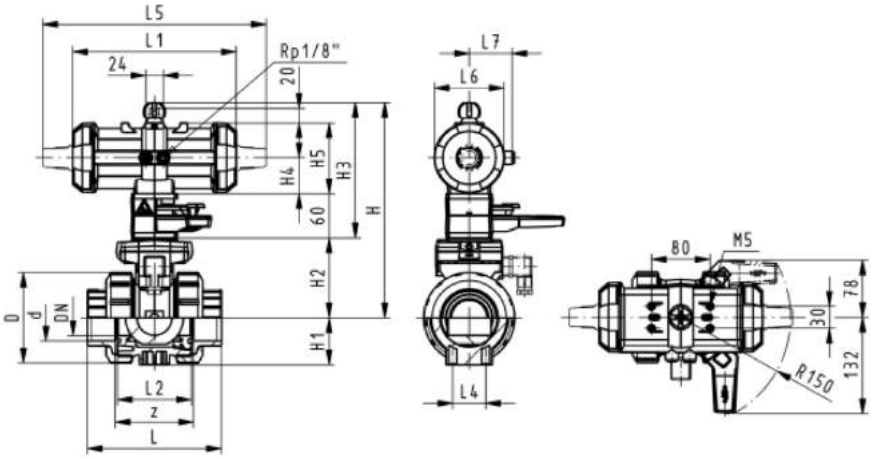

PF 3 39 696 032

Ball valve type 230 PVC-C FO (Fail safe to open)
Without manual override
With backing flanges PP-st metric

Model:

- Control time 90°<) 1-2 s
- Assignment of actuators: PA11 (DN10/15-25), PA21 (DN32-50), PA30 (DN65), PA40 (DN80), PA40 (DN100)
- For easy installation and removal
- Integrated stainless steel mounting inserts
- Overall length according to EN 558
- Connecting dimesnsion: ISO 7005, EN 1092, BS 4504, DIN 2501

Option:

- Individual configuration of the valve (see diagram)

d [mm]	DN [mm]	PN [bar]	kv-value (Δp=1 bar) [l/min]	EPDM Code	SP	Weight [kg]	FPM Code	SP	Weight [kg]
75	65	10	5000	**199 234 629**	1	12.300	**199 234 639**	1	12.300
90	80	10	7000	**199 234 630**	1	15.800	**199 234 640**	1	15.800
110	100	10	11000	**199 234 631**	1	23.200	**199 234 641**	1	23.200

d [mm]	D [mm]	H [mm]	H1 [mm]	H2 [mm]	H5 [mm]	H6 [mm]	L [mm]	L2 [mm]	L3 [mm]	L4 [mm]	L5 [mm]	L6 [mm]
75	166	262	85	156	70	93	284	136	290	70	276	65
90	200	281	105	168	78	100	300	141	310	70	341	72
110	238	292	123	175	86	110	340	164	350	120	369	80

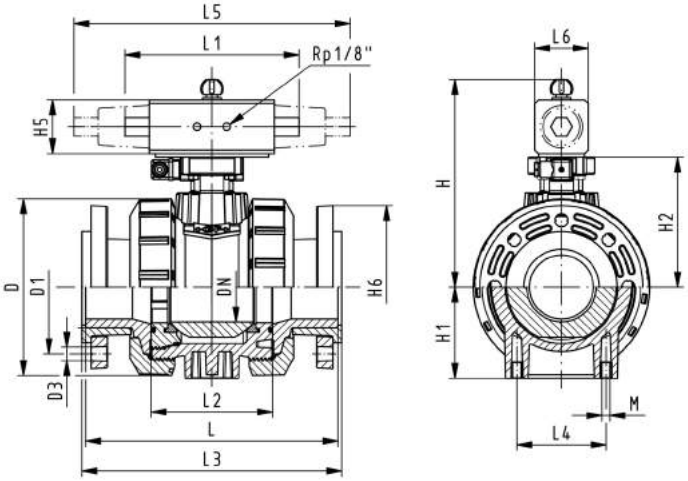

PF 3 39 696 032

DN10/15 - 50

Ball valve type 230 PVC-C DA (Double acting)
Without manual override
With solvent cement sockets metric

Model:

- Control time 90°<) 1-2 s
- Assignment of actuators: PA11 (DN10/15-25), PA21 (DN32-50), PA35 (DN65), PA40 (DN80), PA45 (DN100)
- For easy installation and removal
- Integrated stainless steel mounting inserts

Option:

- Individual configuration of the valve (see diagram)

d [mm]	DN [mm]	PN [bar]	kv-value (Δp=1 bar) [l/min]	EPDM Code	SP	Weight [kg]	FPM Code	SP	Weight [kg]
16	10	10	70	**199 230 602**	1	1.159	**199 230 612**	1	1.159
20	15	10	185	**199 230 603**	1	1.159	**199 230 613**	1	1.159
25	20	10	350	**199 230 604**	1	1.276	**199 230 614**	1	1.276
32	25	10	700	**199 230 605**	1	1.400	**199 230 615**	1	1.400
40	32	10	1000	**199 230 606**	1	2.451	**199 230 616**	1	1.738
50	40	10	1600	**199 230 607**	1	2.773	**199 230 617**	1	1.991
63	50	10	3100	**199 230 608**	1	3.631	**199 230 618**	1	3.631
75	65	10	5000	**199 230 609**	1	7.000	**199 230 619**	1	7.000
90	80	10	7000	**199 230 610**	1	10.200	**199 230 620**	1	10.200
110	100	10	11000	**199 230 611**	1	14.700	**199 230 621**	1	14.700

d [mm]	D [mm]	H [mm]	H1 [mm]	H2 [mm]	H5 [mm]	L [mm]	L1 [mm]	L2 [mm]	L4 [mm]	L5 [mm]	L6 [mm]	L7 [mm]	z [mm]	closest inch [inch]
16	50	159	27	62	77	92	194	56	25	261	76	48	64	⅜
20	50	159	27	62	77	95	194	56	25	261	76	48	64	½
25	58	168	30	71	77	110	194	65	25	261	76	48	72	¾
32	68	168	36	71	77	123	194	71	25	261	76	48	79	1
40	84	202	44	84	99	146	224	85	45	305	95	59	94	1 ¼
50	97	202	51	84	99	157	224	89	45	305	95	59	95	1 ½
63	124	225	64	106	99	183	224	101	45	305	95	59	107	2
75	166	257	85	156	66	233	144	136	70		60		144	2 ½
90	200	274	105	168	70	254	152	141	70		65		151	3
110	238	273	123	175	78	301	169	164	120		72		174	4

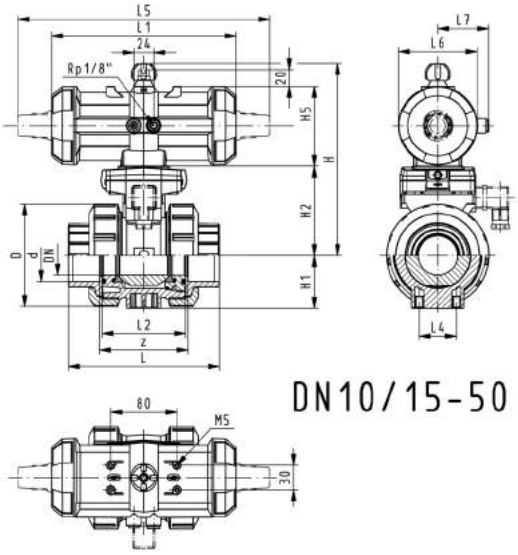

DN10/15-50

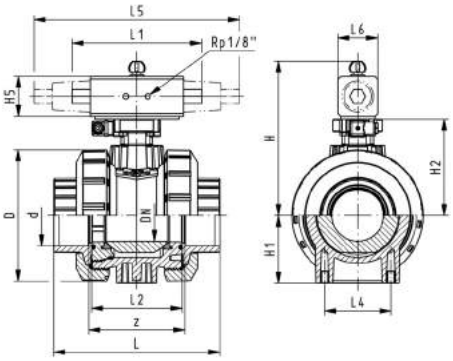

DN65-100

PF 3 39 696 032

DN10/15 - 50

Ball valve type 230 PVC-C DA (Double acting)
With manual override
With solvent cement sockets metric

Model:

- Built on with pneumatic actuator PA11 (DN10/15-25), PA21 (DN32-50)
- Control time 90°<) 1-2 s
- For easy installation and removal
- Integrated stainless steel mounting inserts

Option:

- Individual configuration of the valve (see diagram)

d [mm]	DN [mm]	PN [bar]	kv-value (Δp=1 bar) [l/min]	EPDM Code	SP	Weight [kg]	FPM Code	SP	Weight [kg]
16	10	10	70	**199 230 482**	1	1.459	**199 230 492**	1	1.459
20	15	10	185	**199 230 483**	1	1.459	**199 230 493**	1	1.459
25	20	10	350	**199 230 484**	1	1.576	**199 230 494**	1	1.576
32	25	10	700	**199 230 485**	1	1.269	**199 230 495**	1	1.700
40	32	10	1000	**199 230 486**	1	2.751	**199 230 496**	1	2.751
50	40	10	1600	**199 230 487**	1	3.073	**199 230 497**	1	3.073
63	50	10	3100	**199 230 488**	1	3.931	**199 230 498**	1	3.931

d [mm]	D [mm]	H [mm]	H1 [mm]	H2 [mm]	H3 [mm]	H4 [mm]	H5 [mm]	L [mm]	L1 [mm]	L2 [mm]	L4 [mm]	L5 [mm]	L6 [mm]	L7 [mm]	z [mm]
16	50	230	27	62	168	40	77	92	194	56	25	261	76	48	64
20	50	230	27	62	168	40	77	95	194	56	25	261	76	48	64
25	58	239	30	71	168	40	77	110	194	65	25	261	76	48	72
32	68	239	36	71	168	40	77	123	194	71	25	261	76	48	79
40	84	271	44	84	187	51	99	146	224	85	45	305	95	59	94
50	97	271	51	84	187	51	99	157	224	89	45	305	95	59	95
63	124	293	64	106	187	51	99	183	224	101	45	305	95	59	107

d [mm]	closest inch [inch]
16	⅜
20	½
25	¾
32	1
40	1 ¼
50	1 ½
63	2

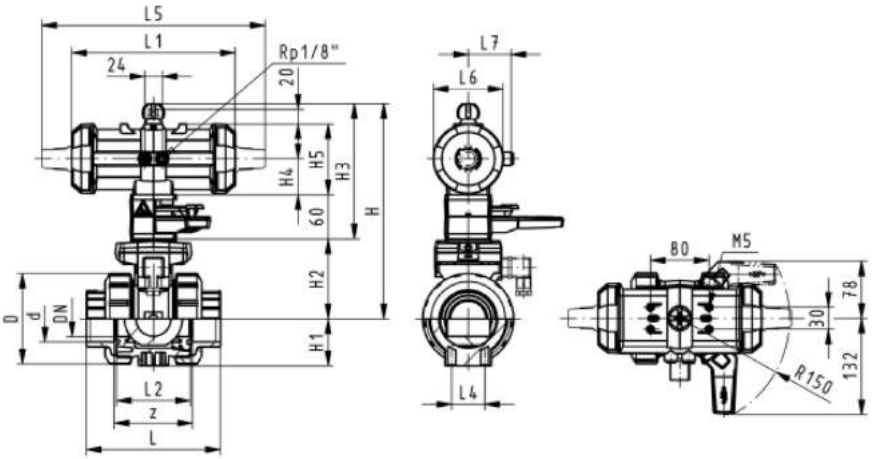

PF 3 39 696 032

DN10/15 - 50

Ball valve type 230 PVC-C DA (Double acting)
Without manual override
With solvent cement spigots metric

Model:

- Control time 90°<) 1-2 s
- Assignment of actuators: PA11 (DN10/15-25), PA21 (DN32-50), PA35 (DN65), PA40 (DN80), PA45 (DN100)
- For easy installation and removal
- Integrated stainless steel mounting inserts

Option:

- Individual configuration of the valve (see diagram)

d [mm]	DN [mm]	PN [bar]	kv-value (Δp=1 bar) [l/min]	EPDM Code	SP	Weight [kg]	FPM Code	SP	Weight [kg]
16	10	10	70	**199 230 622**	1	1.159	**199 230 632**	1	1.159
20	15	10	185	**199 230 623**	1	1.159	**199 230 633**	1	1.159
25	20	10	350	**199 230 624**	1	1.276	**199 230 634**	1	1.276
32	25	10	700	**199 230 625**	1	1.400	**199 230 635**	1	1.052
40	32	10	1000	**199 230 626**	1	2.451	**199 230 636**	1	2.451
50	40	10	1600	**199 230 627**	1	2.773	**199 230 637**	1	2.773
63	50	10	3100	**199 230 628**	1	3.631	**199 230 638**	1	3.631
75	65	10	5000	**199 230 629**	1	7.200	**199 230 639**	1	7.200
90	80	10	7000	**199 230 630**	1	10.400	**199 230 640**	1	10.400
110	100	10	11000	**199 230 631**	1	15.000	**199 230 641**	1	15.000

d [mm]	D [mm]	H [mm]	H1 [mm]	H2 [mm]	H5 [mm]	L [mm]	L1 [mm]	L2 [mm]	L3 [mm]	L4 [mm]	L5 [mm]	L6 [mm]	L7 [mm]	closest inch [inch]
16	50	159	27	62	77	114	194	56	130	25	261	76	48	⅜
20	50	159	27	62	77	124	194	56	130	25	261	76	48	½
25	58	168	30	71	77	144	194	65	150	25	261	76	48	¾
32	68	168	36	71	77	154	194	71	160	25	261	76	48	1
40	84	202	44	84	99	174	224	85	180	45	305	95	59	1 ¼
50	97	202	51	84	99	194	224	89	200	45	305	95	59	1 ½
63	124	225	64	106	99	224	224	101	230	45	305	95	59	2
75	166	257	85	156	66	284	144	136	290	70		60		2 ½
90	200	274	105	168	70	300	152	141	310	70		65		3
110	238	273	123	175	78	340	169	164	350	120		72		4

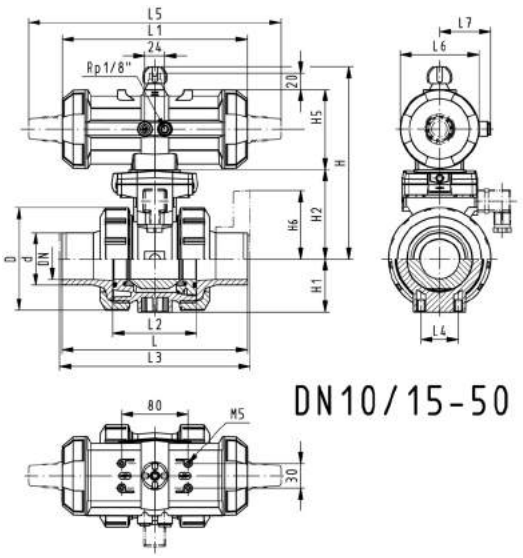

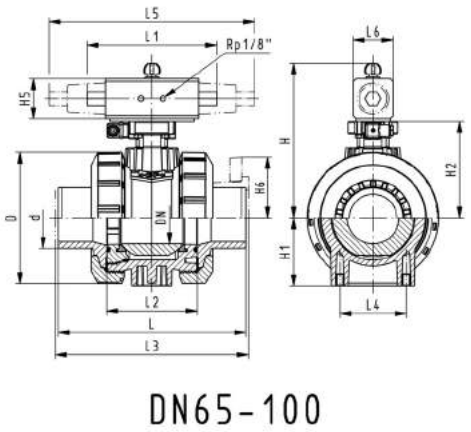

PF 3 39 696 032

DN10/15 - 50

Ball valve type 230 PVC-C DA (Double acting)
With manual override
With solvent cement spigots metric

Model:

- Built on with pneumatic actuator PA11 (DN10/15-25), PA21 (DN32-50)
- Control time 90°<) 1-2 s
- For easy installation and removal
- Integrated stainless steel mounting inserts

Option:

- Individual configuration of the valve (see diagram)

d [mm]	DN [mm]	PN [bar]	kv-value (Δp=1 bar) [l/min]	EPDM Code	SP	Weight [kg]	FPM Code	SP	Weight [kg]
16	10	10	70	**199 230 502**	1	1.459	**199 230 512**	1	1.459
20	15	10	185	**199 230 503**	1	1.459	**199 230 513**	1	1.459
25	20	10	350	**199 230 504**	1	1.576	**199 230 514**	1	1.576
32	25	10	700	**199 230 505**	1	1.700	**199 230 515**	1	1.700
40	32	10	1000	**199 230 506**	1	2.751	**199 230 516**	1	2.751
50	40	10	1600	**199 230 507**	1	3.073	**199 230 517**	1	3.073
63	50	10	3100	**199 230 508**	1	3.931	**199 230 518**	1	3.931

d [mm]	D [mm]	H [mm]	H1 [mm]	H2 [mm]	H3 [mm]	H4 [mm]	H5 [mm]	L [mm]	L1 [mm]	L2 [mm]	L3 [mm]	L4 [mm]	L5 [mm]	L6 [mm]	L7 [mm]
16	50	159	27	62	168	40	77	114	194	56	130	25	261	76	48
20	50	159	27	62	168	40	77	124	194	56	130	25	261	76	48
25	58	168	30	71	168	40	77	144	194	65	150	25	261	76	48
32	68	168	36	71	168	40	77	154	194	71	160	25	261	76	48
40	84	202	44	84	187	51	99	174	224	85	180	45	305	95	59
50	97	202	51	84	187	51	99	194	224	89	200	45	305	95	59
63	124	225	64	106	187	51	99	224	224	101	230	45	305	95	59

d [mm]	closest inch [inch]
16	⅜
20	½
25	¾
32	1
40	1 ¼
50	1 ½
63	2

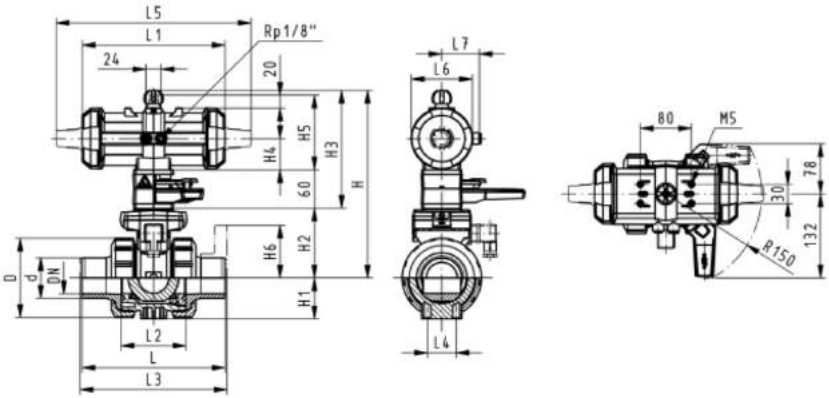

PF 3 39 696 032

DN10/15 - 50

Ball valve type 230 PVC-C DA (Double acting)
Without manual override
With threaded sockets Rp

Model:

- Control time 90°<) 1-2 s
- Assignment of actuators: PA11 (DN10/15-25), PA21 (DN32-50), PA35 (DN65), PA40 (DN80), PA45 (DN100)
- For easy installation and removal
- Integrated stainless steel mounting inserts

Option:

- Individual configuration of the valve (see diagram)

Rp [inch]	DN [mm]	PN [bar]	kv-value (Δp=1 bar) [l/min]	EPDM Code	SP	Weight [kg]	FPM Code	SP	Weight [kg]
⅜	10	10	70	**199 230 942**	1	1.200	**199 230 952**	1	1.200
½	15	10	185	**199 230 943**	1	1.200	**199 230 953**	1	1.200
¾	20	10	350	**199 230 944**	1	1.300	**199 230 954**	1	1.300
1	25	10	700	**199 230 945**	1	1.400	**199 230 955**	1	1.400
1 ¼	32	10	1000	**199 230 946**	1	2.500	**199 230 956**	1	2.500
1 ½	40	10	1600	**199 230 947**	1	2.800	**199 230 957**	1	2.800
2	50	10	3100	**199 230 948**	1	3.700	**199 230 958**	1	3.700
2 ½	65	10	5000	**199 230 949**	1	7.100	**199 230 959**	1	7.100
3	80	10	7000	**199 230 950**	1	10.300	**199 230 960**	1	10.300
4	100	10	11000	**199 230 951**	1	14.800	**199 230 961**	1	14.800

Rp [inch]	D [mm]	H [mm]	H1 [mm]	H2 [mm]	H5 [mm]	L [mm]	L1 [mm]	L2 [mm]	L4 [mm]	L5 [mm]	L6 [mm]	L7 [mm]	z [mm]
⅜	50	159	27	62	77	92	194	56	25	261	76	48	64
½	50	159	27	62	77	95	194	56	25	261	76	48	64
¾	58	168	30	71	77	110	194	65	25	261	76	48	72
1	68	168	36	71	77	123	194	71	25	261	76	48	79
1 ¼	84	202	44	84	99	146	224	85	45	305	95	59	94
1 ½	97	202	51	84	99	157	224	89	45	305	95	59	95
2	124	225	64	106	99	183	224	101	45	305	95	59	107
2 ½	166	257	85	156	66	233	144	136	70		60		144
3	200	274	105	168	70	254	152	141	70		65		151
4	238	273	123	175	78	301	169	164	120		72		174

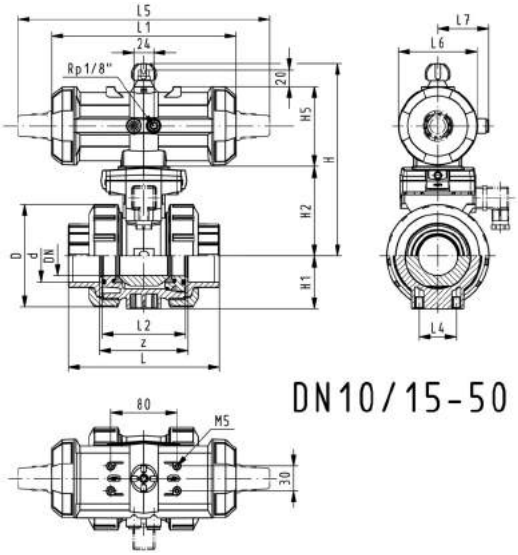

DN10/15-50

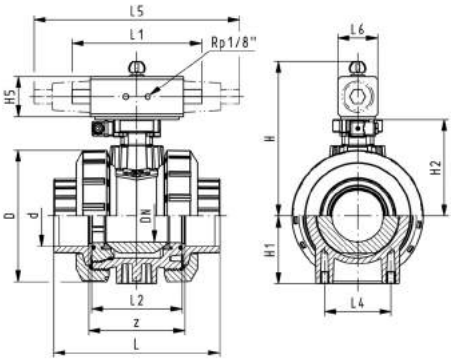

DN65-100

PF 3 39 696 032

DN10/15 - 50

Ball valve type 230 PVC-C DA (Double acting)
With manual override
With threaded sockets Rp

Model:

- Built on with pneumatic actuator PA11 (DN10/15-25), PA21 (DN32-50)
- Control time 90°<) 1-2 s
- For easy installation and removal
- Integrated stainless steel mounting inserts

Option:

- Individual configuration of the valve (see diagram)

Rp [inch]	DN [mm]	PN [bar]	kv-value (Δp=1 bar) [l/min]	EPDM Code	SP	Weight [kg]	FPM Code	SP	Weight [kg]
⅜	10	10	70	**199 230 832**	1	1.500	**199 230 852**	1	1.500
½	15	10	185	**199 230 833**	1	1.500	**199 230 853**	1	1.500
¾	20	10	350	**199 230 834**	1	1.600	**199 230 854**	1	1.600
1	25	10	700	**199 230 835**	1	1.700	**199 230 855**	1	1.700
1 ¼	32	10	1000	**199 230 836**	1	2.800	**199 230 856**	1	2.800
1 ½	40	10	1600	**199 230 837**	1	3.100	**199 230 857**	1	3.100
2	50	10	3100	**199 230 838**	1	4.000	**199 230 858**	1	4.000

Rp [inch]	D [mm]	H [mm]	H1 [mm]	H2 [mm]	H3 [mm]	H4 [mm]	H5 [mm]	L [mm]	L1 [mm]	L2 [mm]	L4 [mm]	L5 [mm]	L6 [mm]	L7 [mm]	z [mm]
⅜	50	159	27	62	168	40	77	92	194	56	25	261	76	48	64
½	50	159	27	62	168	40	77	95	194	56	25	261	76	48	64
¾	58	168	30	71	168	40	77	110	194	65	25	261	76	48	72
1	68	168	36	71	168	40	77	123	194	71	25	261	76	48	79
1 ¼	84	202	44	84	187	51	99	146	224	85	45	305	95	59	94
1 ½	97	202	51	84	187	51	99	157	224	89	45	305	95	59	95
2	124	225	64	106	187	51	99	183	224	101	45	305	95	59	107

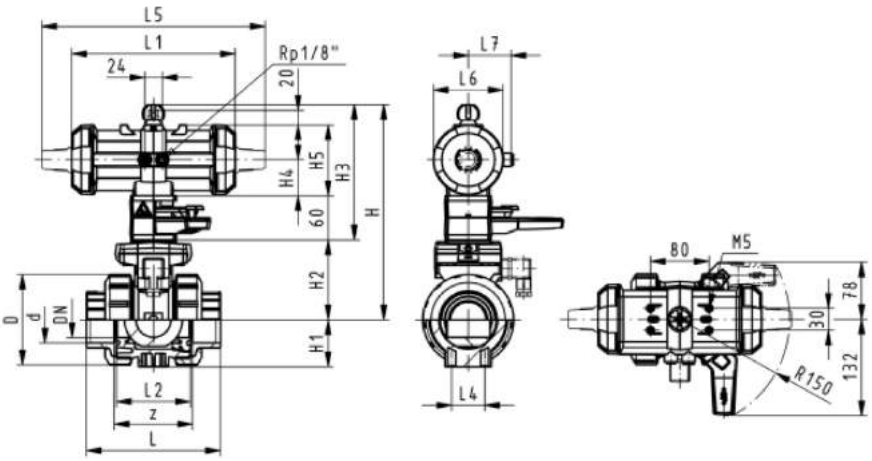

PF 3 39 696 032

Ball valve type 230 PVC-C DA (Double acting)
Without manual override
With backing flanges PP-st metric

Model:

- Control time 90°<) 1-2 s
- Assignment of actuators: PA11 (DN10/15-25), PA21 (DN32-50), PA35 (DN65), PA40 (DN80), PA45 (DN100)
- For easy installation and removal
- Integrated stainless steel mounting inserts
- Overall length according to EN 558
- Connecting dimesnsion: ISO 7005, EN 1092, BS 4504, DIN 2501

Option:

- Individual configuration of the valve (see diagram)

d [mm]	DN [mm]	PN [bar]	kv-value (Δp=1 bar) [l/min]	EPDM Code	SP	Weight [kg]	FPM Code	SP	Weight [kg]
75	65	10	5000	**199 234 649**	1	11.100	**199 234 659**	1	11.100
90	80	10	7000	**199 234 650**	1	15.100	**199 234 660**	1	15.100
110	100	10	11000	**199 234 651**	1	21.500	**199 234 661**	1	21.500

d [mm]	D [mm]	H [mm]	H1 [mm]	H2 [mm]	H5 [mm]	H6 [mm]	L [mm]	L1 [mm]	L2 [mm]	L3 [mm]	L4 [mm]	L6 [mm]
75	166	257	85	156	66	93	284	144	136	290	70	60
90	200	274	105	168	70	100	300	152	141	310	70	65
110	238	273	123	175	78	110	340	169	164	350	120	72

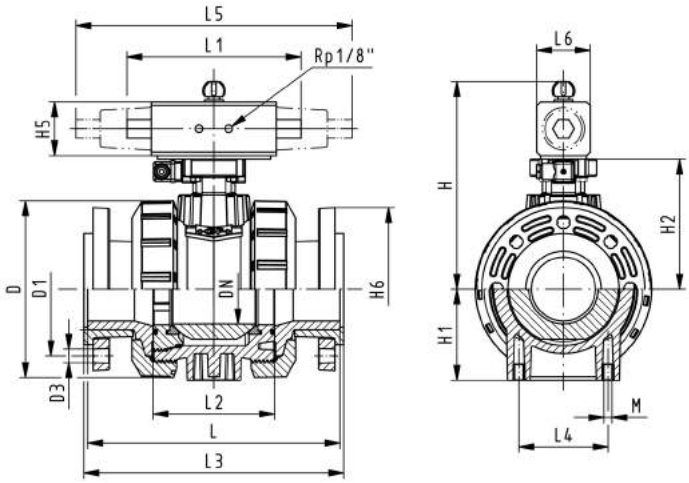

PF 3 39 696 032

285

3-Way ball valve type 285 PVC-C
Horizontal/T-port
Without manual override
With solvent cement sockets metric

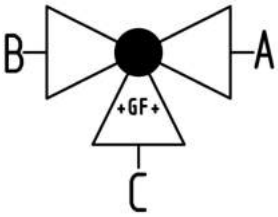

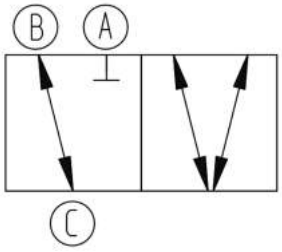

Model:

- Built on with pneumatic actuator PA11 (DN10/15-25), PA21 (DN32-50)
- Actuator fails safe to the closed position FC
- Basic position B-C opened, activated position A-B-C opened, see flow scheme
- Control time 90°<) 1-3 s
- For easy installation and removal
- Integrated stainless steel mounting inserts

d [mm]	DN [mm]	PN [bar]	kv-value (Δp=1 bar) [l/min]	EPDM Code	SP	Weight [kg]	FPM Code	SP	Weight [kg]
16	10	10	140	**199 285 142**	1	1.135	**199 285 152**	1	1.135
20	15	10	200	**199 285 143**	1	1.141	**199 285 153**	1	1.141
25	20	10	470	**199 285 144**	1	1.278	**199 285 154**	1	1.278
32	25	10	793	**199 285 145**	1	1.479	**199 285 155**	1	1.479
40	32	10	1290	**199 285 146**	1	2.608	**199 285 156**	1	2.608
50	40	10	1910	**199 285 147**	1	3.088	**199 285 157**	1	3.088
63	50	10	3100	**199 285 148**	1	4.536	**199 285 158**	1	4.536

d [mm]	D [mm]	H [mm]	H1 [mm]	H2 [mm]	H3 [mm]	H4 [mm]	H5 [mm]	H6 [mm]	L [mm]	L1 [mm]	L2 [mm]	L3 [mm]	L4 [mm]	L5 [mm]	L6 [mm]
16	50	159	28	62	97	40	77	8	109	194	73	36	25	261	76
20	50	159	28	62	97	40	77	8	112	194	73	36	25	261	76
25	58	168	32	71	97	40	77	8	131	194	86	43	25	261	76
32	68	168	36	71	97	40	77	8	151	194	99	50	25	261	76
40	84	203	45	84	119	51	99	9	181	224	120	60	45	305	95
50	97	203	51	84	119	51	99	9	205	224	137	69	45	305	95
63	124	225	65	106	119	51	99	9	261	224	179	89	45	305	95

d [mm]	L7 [mm]	M	z [mm]	z1 [mm]	closest inch [inch]
16	48	6	81	40	⅜
20	48	6	81	40	½
25	48	6	94	47	¾
32	48	6	107	54	1
40	59	8	130	65	1 ¼
50	59	8	143	72	1 ½
63	59	8	185	92	2

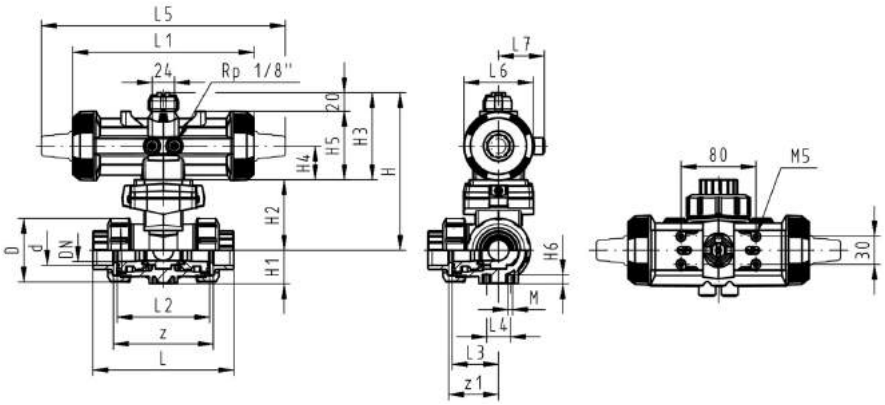

PF 3 39 981 032

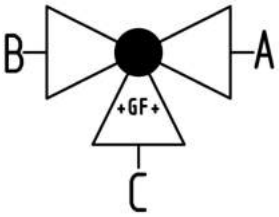

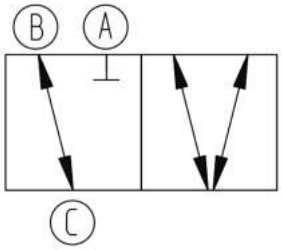

3-Way ball valve type 285 PVC-C
Horizontal/T-port
Without manual override
With solvent cement spigots metric

Model:

- Built on with pneumatic actuator PA11 (DN10/15-25), PA21 (DN32-50)
- Actuator fails safe to the closed position FC
- Basic position B-C opened, activated position A-B-C opened, see flow scheme
- Control time 90°<) 1-3 s
- For easy installation and removal
- Integrated stainless steel mounting inserts

d [mm]	DN [mm]	PN [bar]	kv-value (Δp=1 bar) [l/min]	EPDM Code	SP	Weight [kg]	FPM Code	SP	Weight [kg]
16	10	10	140	**199 285 122**	1	1.141	**199 285 132**	1	1.141
20	15	10	200	**199 285 123**	1	1.151	**199 285 133**	1	1.151
25	20	10	470	**199 285 124**	1	1.294	**199 285 134**	1	1.294
32	25	10	793	**199 285 125**	1	1.505	**199 285 135**	1	1.505
40	32	10	1290	**199 285 126**	1	2.630	**199 285 136**	1	2.630
50	40	10	1910	**199 285 127**	1	3.156	**199 285 137**	1	3.156
63	50	10	3100	**199 285 128**	1	4.673	**199 285 138**	1	4.673

d [mm]	D [mm]	H [mm]	H1 [mm]	H2 [mm]	H3 [mm]	H4 [mm]	H5 [mm]	H6 [mm]	L [mm]	L1 [mm]	L2 [mm]	L3 [mm]	L4 [mm]	L5 [mm]	L6 [mm]
16	50	159	28	62	97	40	77	8	131	194	73	36	25	261	76
20	50	159	28	62	97	40	77	8	141	194	73	36	25	261	76
25	58	168	32	71	97	40	77	8	165	194	86	43	25	261	76
32	68	168	36	71	97	40	77	8	182	194	99	50	25	261	76
40	84	203	45	84	119	51	99	9	209	224	120	60	45	305	95
50	97	203	51	84	119	51	99	9	242	224	137	69	45	305	95
63	124	225	65	106	119	51	99	9	302	224	179	89	45	305	95

d [mm]	L7 [mm]	M	closest inch [inch]
16	48	6	⅜
20	48	6	½
25	48	6	¾
32	48	6	1
40	59	8	1 ¼
50	59	8	1 ½
63	59	8	2

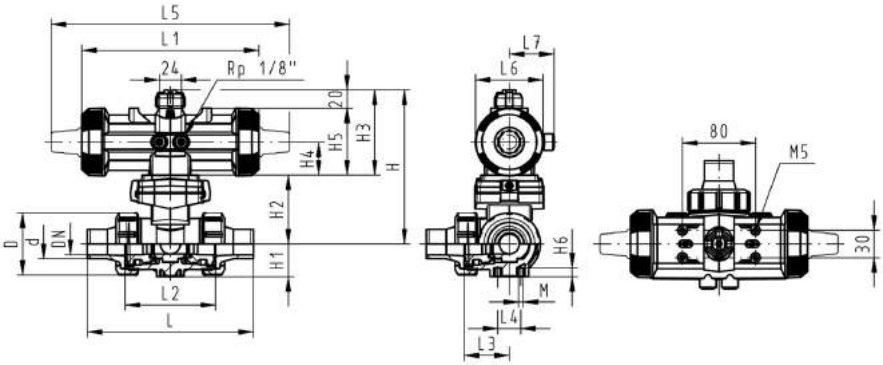

PF 3 39 981 032

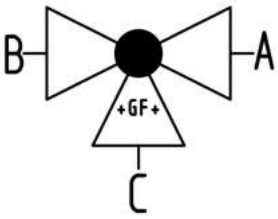

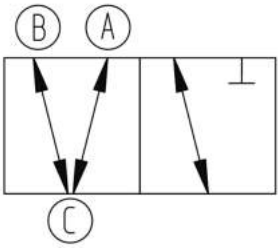

3-Way ball valve type 285 PVC-C Horizontal/T-port DA (Double acting) Without manual override With solvent cement sockets metric

Model:

- Built on with pneumatic actuator PA11 (DN10/15-25), PA21 (DN32-50)
- Basic position A-B-C opened, activated position B-C opened, see flow scheme
- Control time 90°<) 1-3 s
- For easy installation and removal
- Integrated stainless steel mounting inserts

d [mm]	DN [mm]	PN [bar]	kv-value (Δp=1 bar) [l/min]	EPDM Code	SP	Weight [kg]	FPM Code	SP	Weight [kg]
16	10	10	140	**199 285 322**	1	0.944	**199 285 332**	1	0.944
20	15	10	200	**199 285 323**	1	0.951	**199 285 333**	1	0.951
25	20	10	470	**199 285 324**	1	1.088	**199 285 334**	1	1.088
32	25	10	793	**199 285 325**	1	1.289	**199 285 335**	1	1.289
40	32	10	1290	**199 285 326**	1	2.184	**199 285 336**	1	2.184
50	40	10	1910	**199 285 327**	1	2.664	**199 285 337**	1	2.664
63	50	10	3100	**199 285 328**	1	4.112	**199 285 338**	1	4.112

d [mm]	D [mm]	H [mm]	H1 [mm]	H2 [mm]	H3 [mm]	H4 [mm]	H5 [mm]	H6 [mm]	L [mm]	L1 [mm]	L2 [mm]	L3 [mm]	L4 [mm]	L5 [mm]	L6 [mm]
16	50	159	28	62	97	40	77	8	109	194	73	36	25	261	76
20	50	159	28	62	97	40	77	8	112	194	73	36	25	261	76
25	58	168	32	71	97	40	77	8	131	194	86	43	25	261	76
32	68	168	36	71	97	40	77	8	151	194	99	50	25	261	76
40	84	203	45	84	119	51	99	9	181	224	120	60	45	305	95
50	97	203	51	84	119	51	99	9	205	224	137	69	45	305	95
63	124	225	65	106	119	51	99	9	261	224	179	89	45	305	95

d [mm]	L7 [mm]	M	z [mm]	z1 [mm]	closest inch [inch]
16	48	6	81	40	⅜
20	48	6	81	40	½
25	48	6	94	47	¾
32	48	6	107	54	1
40	59	8	130	65	1 ¼
50	59	8	143	72	1 ½
63	59	8	185	92	2

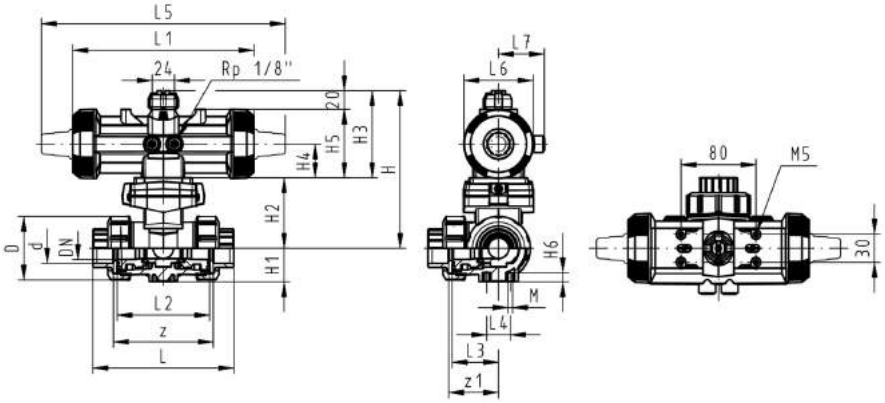

PF 3 39 981 032

3-Way ball valve type 285 PVC-C
Horizontal/T-port DA (Double acting)
Without manual override
With solvent cement spigots metric

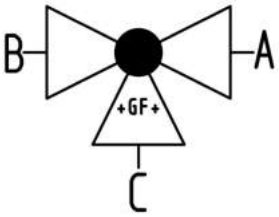

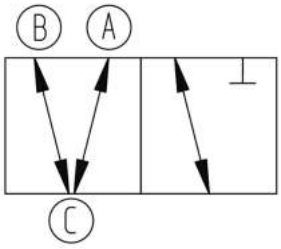

Model:

- Built on with pneumatic actuator PA11 (DN10/15-25), PA21 (DN32-50)
- Basic position A-B-C opened, activated position B-C opened, see flow scheme
- Control time 90°<) 1-3 s
- For easy installation and removal
- Integrated stainless steel mounting inserts

d [mm]	DN [mm]	PN [bar]	kv-value (Δp=1 bar) [l/min]	EPDM Code	SP	Weight [kg]	FPM Code	SP	Weight [kg]
16	10	10	140	**199 285 302**	1	0.951	**199 285 312**	1	0.951
20	15	10	200	**199 285 303**	1	0.961	**199 285 313**	1	0.961
25	20	10	470	**199 285 304**	1	1.104	**199 285 314**	1	1.104
32	25	10	793	**199 285 305**	1	1.315	**199 285 315**	1	1.315
40	32	10	1290	**199 285 306**	1	2.206	**199 285 316**	1	2.206
50	40	10	1910	**199 285 307**	1	2.732	**199 285 317**	1	2.732
63	50	10	3100	**199 285 308**	1	4.249	**199 285 318**	1	4.249

d [mm]	D [mm]	H [mm]	H1 [mm]	H2 [mm]	H3 [mm]	H4 [mm]	H5 [mm]	H6 [mm]	L [mm]	L1 [mm]	L2 [mm]	L3 [mm]	L4 [mm]	L5 [mm]	L6 [mm]
16	50	159	28	62	97	40	77	8	131	194	73	36	25	261	76
20	50	159	28	62	97	40	77	8	141	194	73	36	25	261	76
25	58	168	32	71	97	40	77	8	165	194	86	43	25	261	76
32	68	168	36	71	97	40	77	8	182	194	99	50	25	261	76
40	84	203	45	84	119	51	99	9	209	224	120	60	45	305	95
50	97	203	51	84	119	51	99	9	242	224	137	69	45	305	95
63	124	225	65	106	119	51	99	9	302	224	179	89	45	305	95

d [mm]	L7 [mm]	M	closest inch [inch]
16	48	6	⅜
20	48	6	½
25	48	6	¾
32	48	6	1
40	59	8	1 ¼
50	59	8	1 ½
63	59	8	2

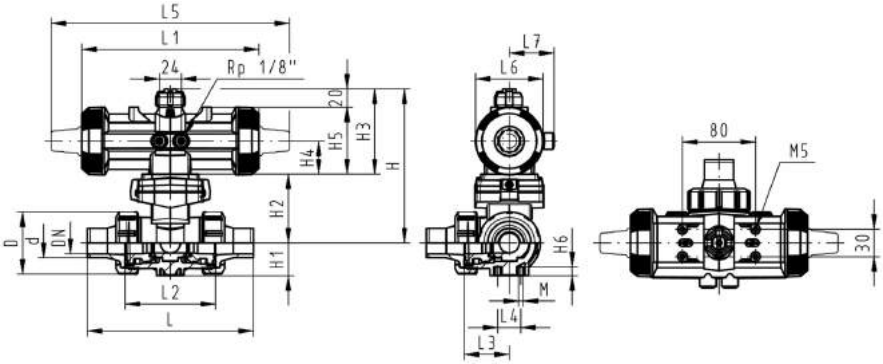

PF 3 39 981 032

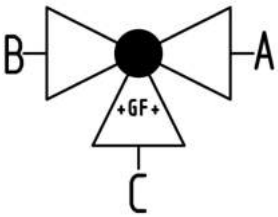

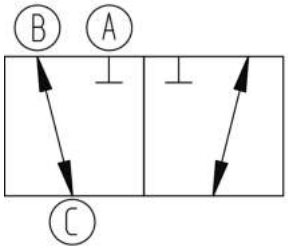

3-Way ball valve type 285 PVC-C
Horizontal/L-port
Without manual override
With solvent cement sockets metric

Model:

- Built on with pneumatic actuator PA11 (DN10/15-25), PA21 (DN32-50)
- Actuator fails safe to the closed position FC
- Basic position B-C opened, activated position A-C opened, see flow scheme
- Control time 90°<) 1-3 s
- For easy installation and removal
- Integrated stainless steel mounting inserts

d [mm]	DN [mm]	PN [bar]	kv-value (Δp=1 bar) [l/min]	EPDM Code	SP	Weight [kg]	FPM Code	SP	Weight [kg]
16	10	10	50	**199 285 102**	1	1.136	**199 285 112**	1	1.136
20	15	10	75	**199 285 103**	1	1.142	**199 285 113**	1	1.142
25	20	10	150	**199 285 104**	1	1.280	**199 285 114**	1	1.280
32	25	10	280	**199 285 105**	1	1.486	**199 285 115**	1	1.486
40	32	10	480	**199 285 106**	1	2.619	**199 285 116**	1	2.619
50	40	10	620	**199 285 107**	1	3.110	**199 285 117**	1	3.110
63	50	10	1230	**199 285 108**	1	4.585	**199 285 118**	1	4.585

d [mm]	D [mm]	H [mm]	H1 [mm]	H2 [mm]	H3 [mm]	H4 [mm]	H5 [mm]	H6 [mm]	L [mm]	L1 [mm]	L2 [mm]	L3 [mm]	L4 [mm]	L5 [mm]	L6 [mm]
16	50	159	28	62	97	40	77	8	109	194	73	36	25	261	76
20	50	159	28	62	97	40	77	8	112	194	73	36	25	261	76
25	58	168	32	71	97	40	77	8	131	194	86	43	25	261	76
32	68	168	36	71	97	40	77	8	151	194	99	50	25	261	76
40	84	203	45	84	119	51	99	9	181	224	120	60	45	305	95
50	97	203	51	84	119	51	99	9	205	224	137	69	45	305	95
63	124	225	65	106	119	51	99	9	261	224	179	89	45	305	95

d [mm]	L7 [mm]	M	z [mm]	z1 [mm]	closest inch [inch]
16	48	6	81	40	⅜
20	48	6	81	40	½
25	48	6	94	47	¾
32	48	6	107	54	1
40	59	8	130	65	1 ¼
50	59	8	143	72	1 ½
63	59	8	185	92	2

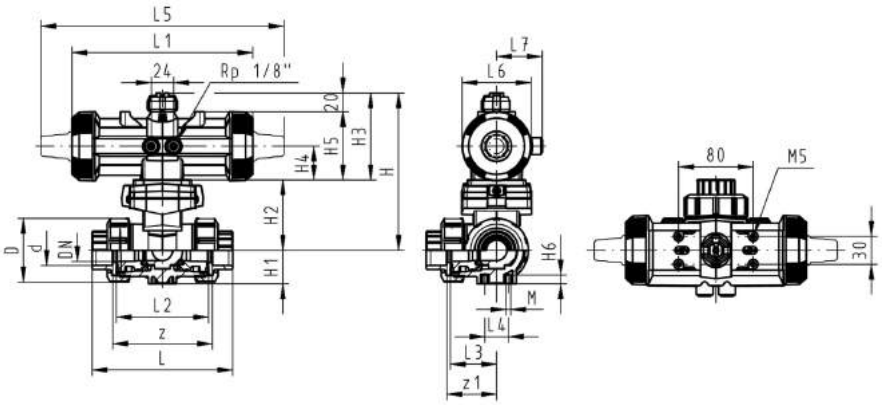

PF 3 39 981 032

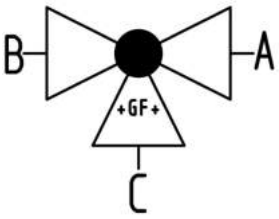

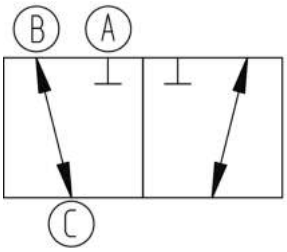

3-Way ball valve type 285 PVC-C
Horizontal/L-port
Without manual override
With solvent cement spigots metric

Model:

- Built on with pneumatic actuator PA11 (DN10/15-25), PA21 (DN32-50)
- Actuator fails safe to the closed position FC
- Basic position B-C opened, activated position A-C opened, see flow scheme
- Control time 90°<) 1-3 s
- For easy installation and removal
- Integrated stainless steel mounting inserts

d [mm]	DN [mm]	PN [bar]	kv-value (Δp=1 bar) [l/min]	EPDM Code	SP	Weight [kg]	FPM Code	SP	Weight [kg]
16	10	10	50	**199 285 082**	1	1.142	**199 285 092**	1	1.142
20	15	10	75	**199 285 083**	1	1.152	**199 285 093**	1	1.152
25	20	10	150	**199 285 084**	1	1.296	**199 285 094**	1	1.296
32	25	10	280	**199 285 085**	1	1.512	**199 285 095**	1	1.512
40	32	10	480	**199 285 086**	1	2.642	**199 285 096**	1	2.642
50	40	10	620	**199 285 087**	1	3.179	**199 285 097**	1	3.179
63	50	10	1230	**199 285 088**	1	4.722	**199 285 098**	1	4.722

d [mm]	D [mm]	H [mm]	H1 [mm]	H2 [mm]	H3 [mm]	H4 [mm]	H5 [mm]	H6 [mm]	L [mm]	L1 [mm]	L2 [mm]	L3 [mm]	L4 [mm]	L5 [mm]	L6 [mm]
16	50	159	28	62	97	40	77	8	131	194	73	36	25	261	76
20	50	159	28	62	97	40	77	8	141	194	73	36	25	261	76
25	58	168	32	71	97	40	77	8	165	194	86	43	25	261	76
32	68	168	36	71	97	40	77	8	182	194	99	50	25	261	76
40	84	203	45	84	119	51	99	9	209	224	120	60	45	305	95
50	97	203	51	84	119	51	99	9	242	224	137	69	45	305	95
63	124	225	65	106	119	51	99	9	302	224	179	89	45	305	95

d [mm]	L7 [mm]	M	closest inch [inch]
16	48	6	⅜
20	48	6	½
25	48	6	¾
32	48	6	1
40	59	8	1 ¼
50	59	8	1 ½
63	59	8	2

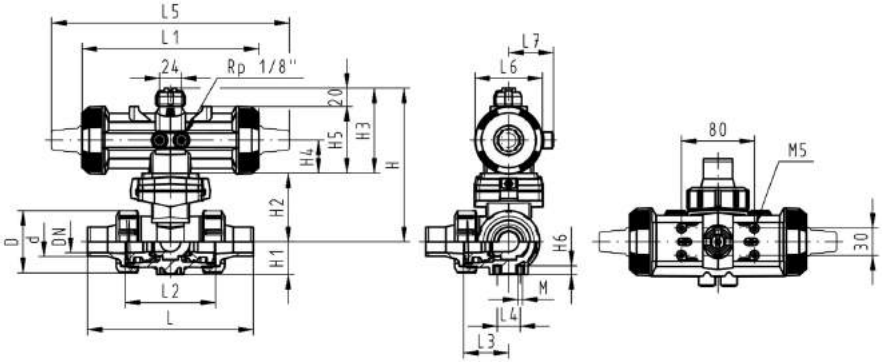

PF 3 39 981 032

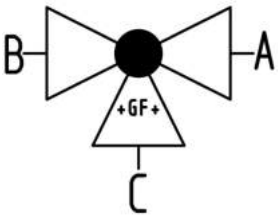

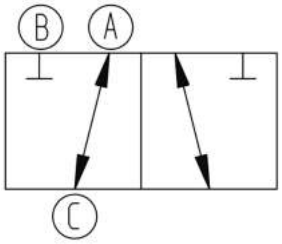

3-Way ball valve type 285 PVC-C Horizontal/L-port DA (Double acting) Without manual override With solvent cement sockets metric

Model:

- Built on with pneumatic actuator PA11 (DN10/15-25), PA21 (DN32-50)
- Basic position A-C opened, activated position B-C opened, see flow scheme
- Control time 90°<) 1-3 s
- For easy installation and removal
- Integrated stainless steel mounting inserts

d [mm]	DN [mm]	PN [bar]	kv-value (Δp=1 bar) [l/min]	EPDM Code	SP	Weight [kg]	FPM Code	SP	Weight [kg]
16	10	10	50	**199 285 282**	1	0.945	**199 285 292**	1	0.945
20	15	10	75	**199 285 283**	1	0.952	**199 285 293**	1	0.952
25	20	10	150	**199 285 284**	1	1.090	**199 285 294**	1	1.090
32	25	10	280	**199 285 285**	1	1.296	**199 285 295**	1	1.296
40	32	10	480	**199 285 286**	1	2.195	**199 285 296**	1	2.195
50	40	10	620	**199 285 287**	1	2.686	**199 285 297**	1	2.686
63	50	10	1230	**199 285 288**	1	4.161	**199 285 298**	1	4.161

d [mm]	D [mm]	H [mm]	H1 [mm]	H2 [mm]	H3 [mm]	H4 [mm]	H5 [mm]	H6 [mm]	L [mm]	L1 [mm]	L2 [mm]	L3 [mm]	L4 [mm]	L5 [mm]	L6 [mm]
16	50	159	28	62	97	40	77	8	109	194	73	36	25	261	76
20	50	159	28	62	97	40	77	8	112	194	73	36	25	261	76
25	58	168	32	71	97	40	77	8	131	194	86	43	25	261	76
32	68	168	36	71	97	40	77	8	151	194	99	50	25	261	76
40	84	203	45	84	119	51	99	9	181	224	120	60	45	305	95
50	97	203	51	84	119	51	99	9	205	224	137	69	45	305	95
63	124	225	65	106	119	51	99	9	261	224	179	89	45	305	95

d [mm]	L7 [mm]	M	z [mm]	z1 [mm]	closest inch [inch]
16	48	6	81	40	⅜
20	48	6	81	40	½
25	48	6	94	47	¾
32	48	6	107	54	1
40	59	8	130	65	1 ¼
50	59	8	143	72	1 ½
63	59	8	185	92	2

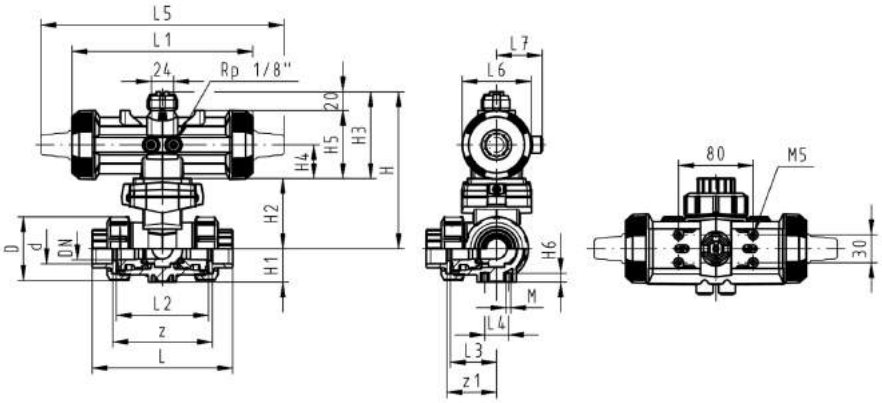

PF 3 39 981 032

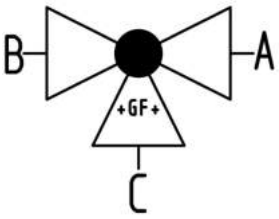

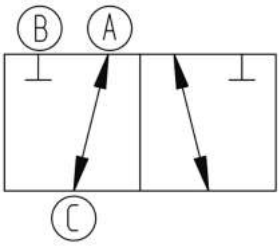

3-Way ball valve type 285 PVC-C Horizontal/L-port DA (Double acting) Without manual override With solvent cement spigots metric

Model:

- Built on with pneumatic actuator PA11 (DN10/15-25), PA21 (DN32-50)
- Basic position A-C opened, activated position B-C opened, see flow scheme
- Control time 90°<) 1-3 s
- For easy installation and removal
- Integrated stainless steel mounting inserts

d [mm]	DN [mm]	PN [bar]	kv-value (Δp=1 bar) [l/min]	EPDM Code	SP	Weight [kg]	FPM Code	SP	Weight [kg]
16	10	10	50	**199 285 262**	1	0.952	**199 285 272**	1	0.952
20	15	10	75	**199 285 263**	1	0.962	**199 285 273**	1	0.962
25	20	10	150	**199 285 264**	1	1.106	**199 285 274**	1	1.106
32	25	10	280	**199 285 265**	1	1.322	**199 285 275**	1	1.322
40	32	10	480	**199 285 266**	1	2.218	**199 285 276**	1	2.218
50	40	10	620	**199 285 267**	1	2.755	**199 285 277**	1	2.755
63	50	10	1230	**199 285 268**	1	4.298	**199 285 278**	1	4.298

d [mm]	D [mm]	H [mm]	H1 [mm]	H2 [mm]	H3 [mm]	H4 [mm]	H5 [mm]	H6 [mm]	L [mm]	L1 [mm]	L2 [mm]	L3 [mm]	L4 [mm]	L5 [mm]	L6 [mm]
16	50	159	28	62	97	40	77	8	131	194	73	36	25	261	76
20	50	159	28	62	97	40	77	8	141	194	73	36	25	261	76
25	58	168	32	71	97	40	77	8	165	194	86	43	25	261	76
32	68	168	36	71	97	40	77	8	182	194	99	50	25	261	76
40	84	203	45	84	119	51	99	9	209	224	120	60	45	305	95
50	97	203	51	84	119	51	99	9	242	224	137	69	45	305	95
63	124	225	65	106	119	51	99	9	302	224	179	89	45	305	95

d [mm]	L7 [mm]	M	closest inch [inch]
16	48	6	⅜
20	48	6	½
25	48	6	¾
32	48	6	1
40	59	8	1 ¼
50	59	8	1 ½
63	59	8	2

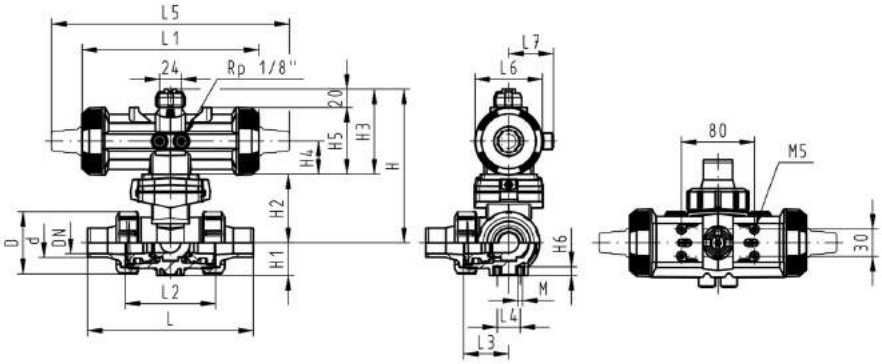

PF 3 39 981 032

Diaphragm valves pneumatic
New generation

Diaphragm valve DIASTAR Six PVC-C
FC (Fail safe to close)
Unions with solvent cement sockets metric

Model:

- Double flow rate compared to predecessor
- One housing nut replaces four screws
- Rotating air connection at 90° intervals
- For easy installation and removal
- Short overall length

Option:

- Individual configuration of the valve (see diagram)

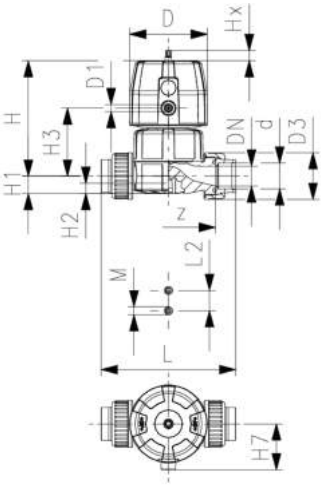

d [mm]	DN [mm]	PN [bar]	kv-value (Δp=1 bar) [l/min]	EPDM Code	SP	Weight [kg]
20	15	6	125	**163 614 012**	1	0.577
25	20	6	271	**163 614 013**	1	1.067
32	25	6	481	**163 614 014**	1	1.302
40	32	6	759	**163 614 015**	1	2.152
50	40	6	960	**163 614 016**	1	2.795
63	50	6	1181	**163 614 017**	1	3.972

d [mm]	D [mm]	D1_G [inch]	H [mm]	H1 [mm]	H2 [mm]	H3 [mm]	H7 [mm]	L [mm]	L2 [mm]	M	z [mm]	Lift = Hx [mm]	closest inch [inch]
20	68	⅛	101	14	12	60	43	128	25	M6	96	7	½
25	96	⅛	132	18	12	73	57	152	25	M6	114	10	¾
32	96	⅛	143	22	12	84	57	166	25	M6	122	13	1
40	120	⅛	173	26	15	99	69	192	45	M8	140	14	1 ¼
50	120	⅛	193	32	15	119	69	222	45	M8	160	16	1 ½
63	120	⅛	205	39	15	132	69	266	45	M8	190	16	2

PF 3 39 212 201

Diaphragm valve DIASTAR Six PVC-C FC (Fail safe to close) With solvent cement spigots metric

Model:

- Double flow rate compared to predecessor
- One housing nut replaces four screws
- Rotating air connection at 90° intervals
- Overall length EN 558

Option:

- Individual configuration of the valve (see diagram)

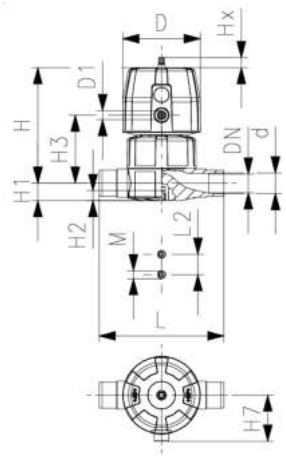

d [mm]	DN [mm]	PN [bar]	kv-value (Δp=1 bar) [l/min]	EPDM Code	SP	Weight [kg]
20	15	6	125	**163 615 012**	1	0.462
25	20	6	271	**163 615 013**	1	0.978
32	25	6	481	**163 615 014**	1	1.166
40	32	6	759	**163 615 015**	1	1.908
50	40	6	960	**163 615 016**	1	2.464
63	50	6	1181	**163 615 017**	1	3.431

d [mm]	D [mm]	D1_G [inch]	H [mm]	H1 [mm]	H2 [mm]	H3 [mm]	H7 [mm]	L [mm]	L2 [mm]	M	Lift = Hx [mm]	closest inch [inch]
20	68	⅛	101	14	12	60	43	124	25	M6	7	½
25	96	⅛	132	18	12	73	57	144	25	M6	10	¾
32	96	⅛	143	22	12	84	57	154	25	M6	13	1
40	120	⅛	173	26	15	99	69	174	45	M8	14	1 ¼
50	120	⅛	193	32	15	119	69	194	45	M8	16	1 ½
63	120	⅛	205	39	15	132	69	224	45	M8	16	2

PF 3 39 212 201

Diaphragm valve DIASTAR Six PVC-C FC (Fail safe to close) With backing flanges PP-V metric/BS

Model:

- Double flow rate compared to predecessor
- One housing nut replaces four screws
- Rotating air connection at 90° intervals
- Flat sealing faces
- Overall length EN 558
- Connecting dimension: ISO 7005 PN 10, EN 1092 PN 10, DIN 2501 PN 10, BS 4504 PN 10

Option:

- Individual configuration of the valve (see diagram)

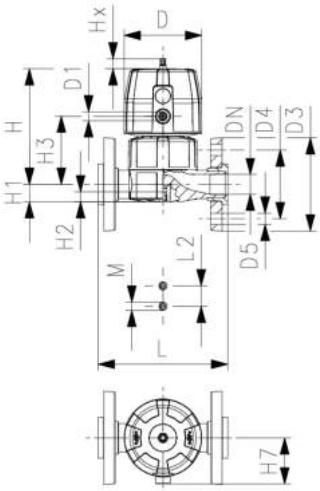

d [mm]	DN [mm]	PN [bar]	kv-value (Δp=1 bar) [l/min]	EPDM Code	SP	Weight [kg]
20	15	6	125	**163 617 112**	1	0.696
25	20	6	271	**163 617 113**	1	1.215
32	25	6	481	**163 617 114**	1	1.502
40	32	6	759	**163 617 115**	1	2.436
50	40	6	960	**163 617 116**	1	3.004
63	50	6	1181	**163 617 117**	1	4.399

d [mm]	D [mm]	D1_G [inch]	D3 [mm]	D4 [mm]	D5 [mm]	H [mm]	H1 [mm]	H2 [mm]	H3 [mm]	H7 [mm]	L [mm]	L2 [mm]	M	Lift = Hx [mm]
20	68	⅛	95	65	14	101	14	12	60	43	130	25	M6	7
25	96	⅛	105	75	14	132	18	12	73	57	150	25	M6	10
32	96	⅛	115	85	14	143	22	12	84	57	160	25	M6	13
40	120	⅛	140	100	18	173	26	15	99	69	180	45	M8	14
50	120	⅛	150	110	18	193	32	15	119	69	200	45	M8	16
63	120	⅛	165	125	18	205	39	15	132	69	230	45	M8	16

d [mm]	closest inch [inch]
20	½
25	¾
32	1
40	1 ¼
50	1 ½
63	2

PF 3 39 212 201

Diaphragm valve DIASTAR Ten PVC-C FC (Fail safe to close) Unions with solvent cement sockets metric

Model:

- Double flow rate compared to predecessor
- One housing nut replaces four screws
- Rotating air connection at 90° intervals
- For easy installation and removal
- Short overall length

Option:

- Individual configuration of the valve (see diagram)
- Comprehensive range of accessories available

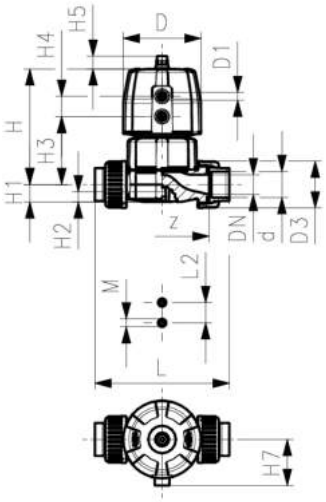

* PN: PTFE
Working Pressure: **one side**

d [mm]	DN [mm]	PN [psi]	PN* [bar]	kv-value (Δp=1 bar) [l/min]	EPDM Code	SP	Weight [kg]
20	15	150/150*	10/10*	125	**163 624 012**	1	0.572
25	20	150/150*	10/10*	271	**163 624 013**	1	1.142
32	25	150/150*	10/10*	481	**163 624 014**	1	1.376
40	32	150/150*	10/10*	759	**163 624 015**	1	2.305
50	40	150/150*	10/10*	1263	**163 624 016**	1	3.932
63	50	150/90*	10/6*	1728	**163 624 017**	1	4.893

d [mm]	PTFE/EPDM Code	SP	Weight [kg]
20	**163 624 032**	1	0.612
25	**163 624 033**	1	1.128
32	**163 624 034**	1	1.393
40	**163 624 035**	1	2.325
50	**163 624 036**	1	3.960
63	**163 624 037**	1	4.925

d [mm]	D [mm]	D1_G [inch]	H [mm]	H1 [mm]	H2 [mm]	H3 [mm]	H4 [mm]	H5 [mm]	H7 [mm]	L [mm]	L2 [mm]	M	z [mm]	Lift = Hx [mm]
20	68	⅛	101	14	12	60	24	16	43	128	25	M6	96	7
25	96	⅛	132	18	12	73	25	16	57	152	25	M6	114	10
32	96	⅛	143	22	12	84	25	16	57	166	25	M6	122	13
40	120	⅛	173	26	15	99	26	26	69	192	45	M8	140	15
50	150	¼	214	32	15	119	36	26	88	222	45	M8	160	19
63	150	¼	226	39	15	132	36	26	88	266	45	M8	190	23

d [mm]	closest inch [inch]
20	½
25	¾
32	1
40	1 ¼
50	1 ½
63	2

PF 3 39 212 201

Diaphragm valve DIASTAR Ten PVC-C FC (Fail safe to close) With solvent cement spigots metric

Model:

- Double flow rate compared to predecessor
- One housing nut replaces four screws
- Rotating air connection at 90° intervals
- Overall length EN 558

Option:

- Individual configuration of the valve (see diagram)
- Comprehensive range of accessories available

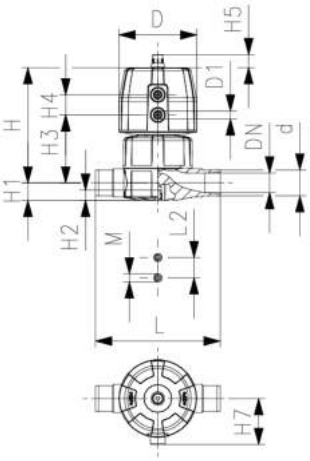

* PN: PTFE
Working Pressure: **one side**

d [mm]	DN [mm]	PN [psi]	PN* [bar]	kv-value (Δp=1 bar) [l/min]	EPDM Code	SP	Weight [kg]
20	15	150/150*	10/10*	125	**163 625 012**	1	0.510
25	20	150/150*	10/10*	271	**163 625 013**	1	1.054
32	25	150/150*	10/10*	481	**163 625 014**	1	1.238
40	32	150/150*	10/10*	759	**163 625 015**	1	2.058
50	40	150/150*	10/10*	1263	**163 625 016**	1	3.602
63	50	150/90*	10/6*	1728	**163 625 017**	1	4.352

d [mm]	PTFE/EPDM Code	SP	Weight [kg]
20	**163 625 032**	1	0.538
25	**163 625 033**	1	1.054
32	**163 625 034**	1	1.259
40	**163 625 035**	1	2.079
50	**163 625 036**	1	3.631
63	**163 625 037**	1	4.380

d [mm]	D [mm]	D1_G [inch]	H [mm]	H1 [mm]	H2 [mm]	H3 [mm]	H4 [mm]	H5 [mm]	H7 [mm]	L [mm]	L2 [mm]	M	Lift = Hx [mm]	closest inch [inch]
20	68	⅛	101	14	12	60	24	16	43	124	25	M6	7	½
25	96	⅛	132	18	12	73	25	16	57	144	25	M6	10	¾
32	96	⅛	143	22	12	84	25	16	57	154	25	M6	13	1
40	120	⅛	173	26	15	99	26	26	69	174	45	M8	15	1 ¼
50	150	¼	214	32	15	119	36	26	88	194	45	M8	19	1 ½
63	150	¼	226	39	15	132	36	26	88	224	45	M8	23	2

PF 3 39 212 201

Diaphragm valve DIASTAR Ten PVC-C FC (Fail safe to close) With backing flanges PP-V metric/BS

Model:

- Double flow rate compared to predecessor
- One housing nut replaces four screws
- Rotating air connection at 90° intervals
- Flat sealing faces
- Overall length EN 558
- Connecting dimension: ISO 7005 PN 10, EN 1092 PN 10, DIN 2501 PN 10, BS 4504 PN 10

Option:

- Individual configuration of the valve (see diagram)
- Comprehensive range of accessories available

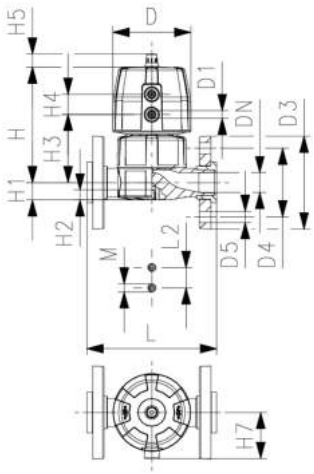

* PN: PTFE
Working Pressure: **one side**

d [mm]	DN [mm]	PN [psi]	PN* [bar]	kv-value (Δp=1 bar) [l/min]	EPDM Code	SP	Weight [kg]
20	15	150/150*	10/10*	125	**163 627 112**	1	0.722
25	20	150/150*	10/10*	271	**163 627 113**	1	1.290
32	25	150/150*	10/10*	481	**163 627 114**	1	1.574
40	32	150/150*	10/10*	759	**163 627 115**	1	2.586
50	40	150/150*	10/10*	1263	**163 627 116**	1	4.142
63	50	150/90*	10/6*	1728	**163 627 117**	1	5.320

d [mm]	PTFE/EPDM Code	SP	Weight [kg]
20	**163 627 132**	1	0.722
25	**163 627 133**	1	1.290
32	**163 627 134**	1	1.595
40	**163 627 135**	1	2.607
50	**163 627 136**	1	4.171
63	**163 627 137**	1	5.348

d [mm]	D [mm]	D1_G [inch]	D3 [mm]	D4 [mm]	D5 [mm]	H [mm]	H1 [mm]	H2 [mm]	H3 [mm]	H4 [mm]	H5 [mm]	H7 [mm]	L [mm]	L2 [mm]
20	68	⅛	95	65	14	101	14	12	60	24	16	43	130	25
25	96	⅛	105	75	14	132	18	12	73	25	16	57	150	25
32	96	⅛	115	85	14	143	22	12	84	25	16	57	160	25
40	120	⅛	140	100	18	173	26	15	99	26	26	69	180	45
50	150	¼	150	110	18	193	32	15	119	36	26	88	200	45
63	150	¼	165	125	18	205	39	15	132	36	26	88	230	45

d [mm]	M	Lift = Hx [mm]	closest inch [inch]
20	M6	7	½
25	M6	10	¾
32	M6	13	1
40	M8	15	1 ¼
50	M8	19	1 ½
63	M8	23	2

PF 3 39 212 201

Diaphragm valve DIASTAR Ten PVC-C FO (Fail safe to open) Unions with solvent cement sockets metric

Model:

- Double flow rate compared to predecessor
- One housing nut replaces four screws
- Rotating air connection at 90° intervals
- For easy installation and removal
- Short overall length

Option:

- Individual configuration of the valve (see diagram)
- Comprehensive range of accessories available

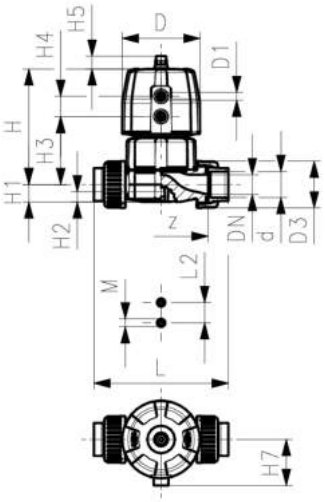

* PN: PTFE
Working Pressure: **one side**

d [mm]	DN [mm]	PN* [bar]	kv-value (Δp=1 bar) [l/min]	EPDM Code	SP	Weight [kg]	PTFE/EPDM Code	SP	Weight [kg]
20	15	10/10*	125	**163 644 012**	1	0.553	**163 644 032**	1	0.562
25	20	10/10*	271	**163 644 013**	1	0.968	**163 644 033**	1	0.978
32	25	10/10*	481	**163 644 014**	1	1.194	**163 644 034**	1	1.213
40	32	10/10*	759	**163 644 015**	1	1.945	**163 644 035**	1	1.965
50	40	10/10*	1263	**163 644 016**	1	3.326	**163 644 036**	1	3.870
63	50	10/10*	1728	**163 644 017**	1	4.011	**163 644 037**	1	4.830

d [mm]	D [mm]	D1_G [inch]	H [mm]	H1 [mm]	H2 [mm]	H3 [mm]	H4 [mm]	H5 [mm]	H7 [mm]	L [mm]	L2 [mm]	M	z [mm]	Lift = Hx [mm]
20	68	⅛	101	14	12	60	24	16	43	128	25	M6	96	7
25	96	⅛	132	18	12	73	25	16	57	152	25	M6	114	10
32	96	⅛	143	22	12	84	25	16	57	166	25	M6	122	13
40	120	⅛	173	26	15	99	26	26	69	192	45	M8	140	15
50	150	¼	214	32	15	119	36	26	88	222	45	M8	160	19
63	150	¼	226	39	15	132	36	26	88	266	45	M8	190	23

d [mm]	closest inch [inch]
20	½
25	¾
32	1
40	1 ¼
50	1 ½
63	2

PF 3 39 212 201

Diaphragm valve DIASTAR Ten PVC-C FO (Fail safe to open) With solvent cement spigots metric

Model:

- Double flow rate compared to predecessor
- One housing nut replaces four screws
- Rotating air connection at 90° intervals
- Overall length EN 558

Option:

- Individual configuration of the valve (see diagram)
- Comprehensive range of accessories available

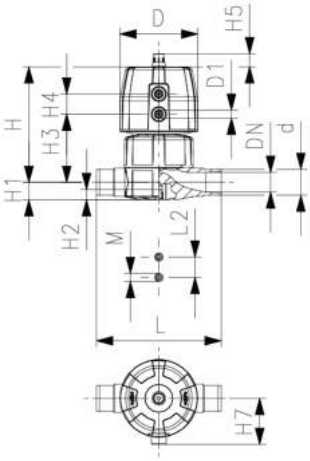

* PN: PTFE
Working Pressure: **one side**

d [mm]	DN [mm]	PN* [bar]	kv-value (Δp=1 bar) [l/min]	EPDM Code	SP	Weight [kg]	PTFE/EPDM Code	SP	Weight [kg]
20	15	10/10*	125	**163 645 012**	1	0.488	**163 645 032**	1	0.488
25	20	10/10*	271	**163 645 013**	1	0.879	**163 645 033**	1	0.879
32	25	10/10*	481	**163 645 014**	1	1.058	**163 645 034**	1	1.079
40	32	10/10*	759	**163 645 015**	1	1.698	**163 645 035**	1	1.719
50	40	10/10*	1263	**163 645 016**	1	3.512	**163 645 036**	1	3.541
63	50	10/10*	1728	**163 645 017**	1	4.262	**163 645 037**	1	4.290

d [mm]	D [mm]	D1_G [inch]	H [mm]	H1 [mm]	H2 [mm]	H3 [mm]	H4 [mm]	H5 [mm]	H7 [mm]	L [mm]	L2 [mm]	M	Lift = Hx [mm]	closest inch [inch]
20	68	⅛	101	14	12	60	24	16	43	124	25	M6	7	½
25	96	⅛	132	18	12	73	25	16	57	144	25	M6	10	¾
32	96	⅛	143	22	12	84	25	16	57	154	25	M6	13	1
40	120	⅛	173	26	15	99	26	26	69	174	45	M8	15	1 ¼
50	150	¼	214	32	15	119	36	26	88	194	45	M8	19	1 ½
63	150	¼	226	39	15	132	36	26	88	224	45	M8	23	2

PF 3 39 212 201

Diaphragm valve DIASTAR Ten PVC-C FO (Fail safe to open) With backing flanges PP-V metric/BS

Model:

- Double flow rate compared to predecessor
- One housing nut replaces four screws
- Rotating air connection at 90° intervals
- Flat sealing faces
- Overall length EN 558
- Connecting dimension: ISO 7005 PN 10, EN 1092 PN 10, DIN 2501 PN 10, BS 4504 PN 10

Option:

- Individual configuration of the valve (see diagram)
- Comprehensive range of accessories available

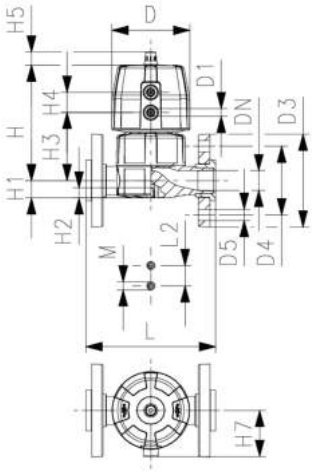

* PN: PTFE
Working Pressure: **one side**

d [mm]	DN [mm]	PN* [bar]	kv-value (Δp=1 bar) [l/min]	EPDM Code	SP	Weight [kg]	PTFE/EPDM Code	SP	Weight [kg]
20	15	10/10*	125	**163 647 112**	1	0.672	**163 647 132**	1	0.672
25	20	10/10*	271	**163 647 113**	1	1.116	**163 647 133**	1	1.116
32	25	10/10*	481	**163 647 114**	1	1.394	**163 647 134**	1	1.415
40	32	10/10*	759	**163 647 115**	1	2.226	**163 647 135**	1	2.247
50	40	10/10*	1263	**163 647 116**	1	4.052	**163 647 136**	1	4.081
63	50	10/10*	1728	**163 647 117**	1	5.230	**163 647 137**	1	4.768

d [mm]	D [mm]	D1_G [inch]	D3 [mm]	D4 [mm]	D5 [mm]	H [mm]	H1 [mm]	H2 [mm]	H3 [mm]	H4 [mm]	H5 [mm]	H7 [mm]	L [mm]	L2 [mm]
20	68	⅛	95	65	14	101	14	12	60	24	16	43	130	25
25	96	⅛	105	75	14	132	18	12	73	25	16	57	150	25
32	96	⅛	115	85	14	143	22	12	84	25	16	57	160	25
40	120	⅛	140	100	18	173	26	15	99	26	26	69	180	45
50	150	¼	150	110	18	214	32	15	119	36	26	88	200	45
63	150	¼	165	125	18	226	39	15	132	36	26	88	230	45

d [mm]	M	Lift = Hx [mm]	closest inch [inch]
20	M6	7	½
25	M6	10	¾
32	M6	13	1
40	M8	15	1 ¼
50	M8	19	1 ½
63	M8	23	2

PF 3 39 212 201

Diaphragm valve DIASTAR Ten PVC-C
DA (Double acting)
Unions with solvent cement sockets metric

Model:

- Double flow rate compared to predecessor
- One housing nut replaces four screws
- Rotating air connection at 90° intervals
- For easy installation and removal
- Short overall length

Option:

- Individual configuration of the valve (see diagram)
- Comprehensive range of accessories available

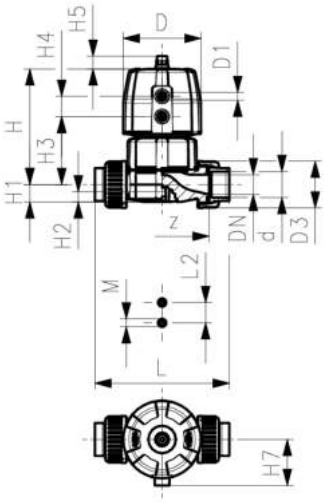

* PN: PTFE
Working Pressure: **one side**

d [mm]	DN [mm]	PN* [bar]	kv-value (Δp=1 bar) [l/min]	EPDM Code	SP	Weight [kg]	PTFE/EPDM Code	SP	Weight [kg]
20	15	10/10*	125	**163 654 012**	1	0.537	**163 654 032**	1	0.546
25	20	10/10*	271	**163 654 013**	1	0.932	**163 654 033**	1	0.942
32	25	10/10*	481	**163 654 014**	1	1.164	**163 654 034**	1	1.183
40	32	10/10*	759	**163 654 015**	1	1.885	**163 654 035**	1	1.905
50	40	10/10*	1263	**163 654 016**	1	3.092	**163 654 036**	1	3.120
63	50	10/10*	1728	**163 654 017**	1	4.053	**163 654 037**	1	4.080

d [mm]	D [mm]	D1_G [inch]	H [mm]	H1 [mm]	H2 [mm]	H3 [mm]	H4 [mm]	H5 [mm]	H7 [mm]	L [mm]	L2 [mm]	M	z [mm]	Lift = Hx [mm]
20	68	⅛	101	14	12	60	24	16	43	128	25	M6	96	7
25	96	⅛	132	18	12	73	25	16	57	152	25	M6	114	10
32	96	⅛	143	22	12	84	25	16	57	166	25	M6	122	13
40	120	⅛	173	26	15	99	26	26	69	192	45	M8	140	15
50	150	¼	214	32	15	119	36	26	88	222	45	M8	160	19
63	150	¼	226	39	15	132	36	26	88	266	45	M8	190	23

d [mm]	closest inch [inch]
20	½
25	¾
32	1
40	1 ¼
50	1 ½
63	2

PF 3 39 212 201

Diaphragm valve DIASTAR Ten PVC-C DA (Double acting) With solvent cement spigots metric

Model:

- Double flow rate compared to predecessor
- One housing nut replaces four screws
- Rotating air connection at 90° intervals
- Overall length EN 558

Option:

- Individual configuration of the valve (see diagram)
- Comprehensive range of accessories available

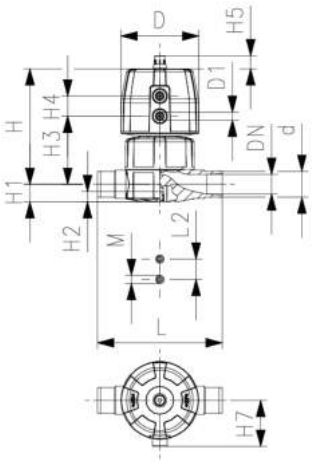

* PN: PTFE
Working Pressure: **one side**

d [mm]	DN [mm]	PN* [bar]	kv-value (Δp=1 bar) [l/min]	EPDM Code	SP	Weight [kg]	PTFE/EPDM Code	SP	Weight [kg]
20	15	10/10*	125	**163 655 012**	1	0.472	**163 655 032**	1	0.472
25	20	10/10*	271	**163 655 013**	1	0.843	**163 655 033**	1	0.843
32	25	10/10*	481	**163 655 014**	1	1.028	**163 655 034**	1	1.049
40	32	10/10*	759	**163 655 015**	1	1.638	**163 655 035**	1	1.659
50	40	10/10*	1263	**163 655 016**	1	2.762	**163 655 036**	1	2.791
63	50	10/10*	1728	**163 655 017**	1	3.512	**163 655 037**	1	3.540

d [mm]	D [mm]	D1_G [inch]	H [mm]	H1 [mm]	H2 [mm]	H3 [mm]	H4 [mm]	H5 [mm]	H7 [mm]	L [mm]	L2 [mm]	M	Lift = Hx [mm]	closest inch [inch]
20	68	⅛	101	14	12	60	24	16	43	124	25	M6	7	½
25	96	⅛	132	18	12	73	25	16	57	144	25	M6	10	¾
32	96	⅛	143	22	12	84	25	16	57	154	25	M6	13	1
40	120	⅛	173	26	15	99	26	26	69	174	45	M8	15	1 ¼
50	150	¼	214	32	15	119	36	26	88	194	45	M8	19	1 ½
63	150	¼	226	39	15	132	36	26	88	224	45	M8	23	2

PF 3 39 212 201

Diaphragm valve DIASTAR Ten PVC-C DA (Double acting) With backing flanges PP-V metric/BS

Model:

- Double flow rate compared to predecessor
- One housing nut replaces four screws
- Rotating air connection at 90° intervals
- Flat sealing faces
- Overall length EN 558
- Connecting dimension: ISO 7005 PN 10, EN 1092 PN 10, DIN 2501 PN 10, BS 4504 PN 10

Option:

- Individual configuration of the valve (see diagram)
- Comprehensive range of accessories available

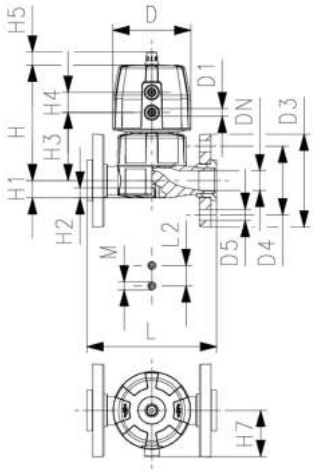

* PN: PTFE
Working Pressure: **one side**

d [mm]	DN [mm]	PN* [bar]	kv-value (Δp=1 bar) [l/min]	EPDM Code	SP	Weight [kg]	PTFE/EPDM Code	SP	Weight [kg]
20	15	10/10*	125	**163 657 112**	1	0.656	**163 657 132**	1	0.656
25	20	10/10*	271	**163 657 113**	1	1.080	**163 657 133**	1	1.080
32	25	10/10*	481	**163 657 114**	1	1.364	**163 657 134**	1	1.441
40	32	10/10*	759	**163 657 115**	1	2.166	**163 657 135**	1	2.187
50	40	10/10*	1263	**163 657 116**	1	3.302	**163 657 136**	1	3.331
63	50	10/10*	1728	**163 657 117**	1	4.480	**163 657 137**	1	4.508

d [mm]	D [mm]	D1_G [inch]	D3 [mm]	D4 [mm]	D5 [mm]	H [mm]	H1 [mm]	H2 [mm]	H3 [mm]	H4 [mm]	H5 [mm]	H7 [mm]	L [mm]	L2 [mm]
20	68	⅛	95	65	14	101	14	12	60	24	16	43	130	25
25	96	⅛	105	75	14	132	18	12	73	25	16	57	150	25
32	96	⅛	115	85	14	143	22	12	84	25	16	57	160	25
40	120	⅛	140	100	18	173	26	15	99	26	26	69	180	45
50	150	¼	150	110	18	214	32	15	119	36	26	88	200	45
63	150	¼	165	125	18	226	39	15	132	36	26	88	230	45

d [mm]	M	Lift = Hx [mm]	closest inch [inch]
20	M6	7	½
25	M6	10	¾
32	M6	13	1
40	M8	15	1 ¼
50	M8	19	1 ½
63	M8	23	2

PF 3 39 212 201

Diaphragm valve DIASTAR TenPlus PVC-C FC (Fail safe to close) Unions with solvent cement sockets metric

Model:

- Double flow rate compared to predecessor
- One housing nut replaces four screws
- Rotating air connection at 90° intervals
- For easy installation and removal
- Short overall length

Option:

- Individual configuration of the valve (see diagram)
- Comprehensive range of accessories available

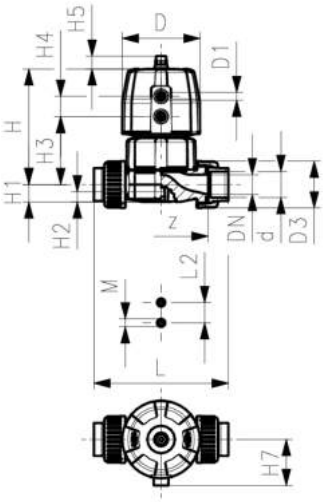

* PN: PTFE
Working Pressure: **both sides**

d [mm]	DN [mm]	PN* [bar]	kv-value (Δp=1 bar) [l/min]	EPDM Code	SP	Weight [kg]	PTFE/EPDM Code	SP	Weight [kg]
20	15	10/10*	125	**163 684 012**	1	1.004	**163 684 032**	1	1.012
25	20	10/10*	271	**163 684 013**	1	1.142	**163 684 033**	1	1.153
32	25	10/10*	481	**163 684 014**	1	1.968	**163 684 034**	1	1.987
40	32	10/10*	759	**163 684 015**	1	3.375	**163 684 035**	1	3.395
50	40	10/10*	1263	**163 684 016**	1	5.340	**163 684 036**	1	5.368
63	50	10/10*	1728	**163 684 017**	1	6.300	**163 684 037**	1	6.327

d [mm]	D [mm]	D1_G [inch]	H [mm]	H1 [mm]	H2 [mm]	H3 [mm]	H4 [mm]	H5 [mm]	H7 [mm]	L [mm]	L2 [mm]	M	z [mm]	Lift = Hx [mm]
20	96	⅛	127	14	12	68	25	16	57	128	25	M6	96	7
25	96	⅛	132	18	12	73	25	16	57	152	25	M6	114	10
32	120	⅛	167	22	12	93	26	26	69	166	25	M6	122	13
40	150	¼	196	26	15	101	36	26	88	192	45	M8	140	15
50	180	¼	239	32	15	124	37	26	103	222	45	M8	160	19
63	180	¼	251	39	15	137	37	26	103	266	45	M8	190	23

d [mm]	closest inch [inch]
20	½
25	¾
32	1
40	1 ¼
50	1 ½
63	2

PF 3 39 212 201

Diaphragm valve DIASTAR TenPlus PVC-C FC (Fail safe to close) With solvent cement spigots metric

Model:

- Double flow rate compared to predecessor
- One housing nut replaces four screws
- Rotating air connection at 90° intervals
- Overall length EN 558

Option:

- Individual configuration of the valve (see diagram)
- Comprehensive range of accessories available

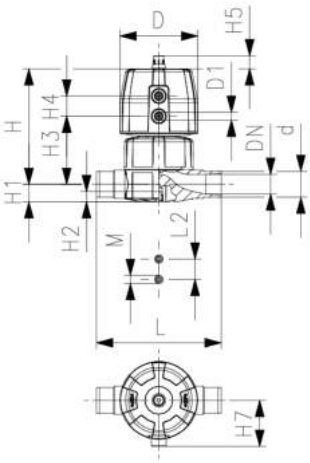

* PN: PTFE
Working Pressure: **both sides**

d [mm]	DN [mm]	PN* [bar]	kv-value (Δp=1 bar) [l/min]	EPDM Code	SP	Weight [kg]	PTFE/EPDM Code	SP	Weight [kg]
20	15	10/10*	125	**163 685 012**	1	0.943	**163 685 032**	1	0.938
25	20	10/10*	271	**163 685 013**	1	1.054	**163 685 033**	1	1.054
32	25	10/10*	481	**163 685 014**	1	1.947	**163 685 034**	1	1.853
40	32	10/10*	759	**163 685 015**	1	3.128	**163 685 035**	1	3.149
50	40	10/10*	1263	**163 685 016**	1	5.010	**163 685 036**	1	5.039
63	50	10/10*	1728	**163 685 017**	1	5.759	**163 685 037**	1	5.787

d [mm]	D [mm]	D1_G [inch]	H [mm]	H1 [mm]	H2 [mm]	H3 [mm]	H4 [mm]	H5 [mm]	H7 [mm]	L [mm]	L2 [mm]	M	Lift = Hx [mm]	closest inch [inch]
20	96	⅛	127	14	12	68	25	16	57	124	25	M6	7	½
25	96	⅛	132	18	12	73	25	16	57	144	25	M6	10	¾
32	120	⅛	167	22	12	93	26	26	69	154	25	M6	13	1
40	150	¼	196	26	15	101	36	26	88	174	45	M8	15	1 ¼
50	180	¼	239	32	15	124	37	26	103	194	45	M8	19	1 ½
63	180	¼	251	39	15	137	37	26	103	224	45	M8	23	2

PF 3 39 212 201

Diaphragm valve DIASTAR TenPlus PVC-C FC (Fail safe to close) With backing flanges PP-V metric/BS

Model:

- Double flow rate compared to predecessor
- One housing nut replaces four screws
- Rotating air connection at 90° intervals
- Flat sealing faces
- Overall length EN 558
- Connecting dimension: ISO 7005 PN 10, EN 1092 PN 10, DIN 2501 PN 10, BS 4504 PN 10

Option:

- Individual configuration of the valve (see diagram)
- Comprehensive range of accessories available

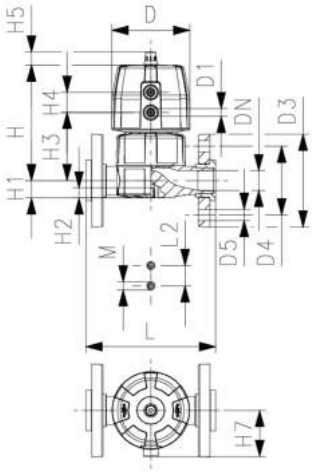

* PN: PTFE
Working Pressure: **both sides**

d [mm]	DN [mm]	PN* [bar]	kv-value (Δp=1 bar) [l/min]	EPDM Code	SP	Weight [kg]	PTFE/EPDM Code	SP	Weight [kg]
20	15	10/10*	125	**163 687 112**	1	1.123	**163 687 132**	1	1.123
25	20	10/10*	271	**163 687 113**	1	1.290	**163 687 133**	1	1.290
32	25	10/10*	481	**163 687 114**	1	2.168	**163 687 134**	1	2.320
40	32	10/10*	759	**163 687 115**	1	3.656	**163 687 135**	1	3.677
50	40	10/10*	1263	**163 687 116**	1	5.550	**163 687 136**	1	5.579
63	50	10/10*	1728	**163 687 117**	1	6.727	**163 687 137**	1	7.147

d [mm]	D [mm]	D1_G [inch]	D3 [mm]	D4 [mm]	D5 [mm]	H [mm]	H1 [mm]	H2 [mm]	H3 [mm]	H4 [mm]	H5 [mm]	H7 [mm]	L [mm]	L2 [mm]
20	96	⅛	95	65	14	127	14	12	68	25	16	57	130	25
25	96	⅛	105	75	14	132	18	12	73	25	16	57	150	25
32	120	⅛	115	85	14	167	22	12	93	26	26	69	160	25
40	150	¼	140	100	18	196	26	15	101	36	26	88	180	45
50	180	¼	150	110	18	239	32	15	124	37	26	103	200	45
63	180	¼	165	125	18	251	39	15	137	37	26	103	230	45

d [mm]	M	Lift = Hx [mm]	closest inch [inch]
20	M6	7	½
25	M6	10	¾
32	M6	13	1
40	M8	15	1 ¼
50	M8	19	1 ½
63	M8	23	2

PF 3 39 212 201

Diaphragm valves pneumatic

Diaphragm valve type DIASTAR PVC-C
Series 025 FC (Fail safe to close)
With fixed flanges PVC-C metric

Model:

- Connecting dimension: ISO 7005 / EN 1092 / DIN 25 PN10 / BS4504

- With position indicator / Working pressure: **one side**

* With backing flanges PP-V
** Connecting dimensions DN80 and DN150 metric and Inch ANSI B16.5

	d [mm]	Size [inch]	DN [mm]	PN [bar]	kv-value (Δp=1 bar) [l/min]	EPDM Code	Weight [kg]	PTFE/EPDM Code	Weight [kg]
*	75	2 ½	65	10	992	**199 025 697**	13.600	**199 025 727**	13.600
**	90	3	80	10	1700	**199 025 698**	17.830	**199 025 728**	17.973
	110	4	100	6	2700	**199 025 699**	24.700	**199 025 729**	24.700

	d [mm]	D [mm]	D1_G [inch]	D2 [mm]	D3[M] [mm]	D4 [mm]	H [mm]	H1 [mm]	H2 [mm]	H3 [mm]	H4 [mm]	H5 [mm]	H6 [mm]	H7 [mm]
*	75	280	¼	185	8	145	344	148	24	46	100	129	195	298
**	90	280	¼	200	12	160	348	150	24	46	100	129	195	302
	110	335	¼	225	12	180	395	176	24	46	100	129	195	349

	d [mm]	H9 [mm]	H10 [mm]	L [mm]	L2 [mm]
*	75	46	15	290	70
**	90	57	15	310	120
	110	69	20	350	120

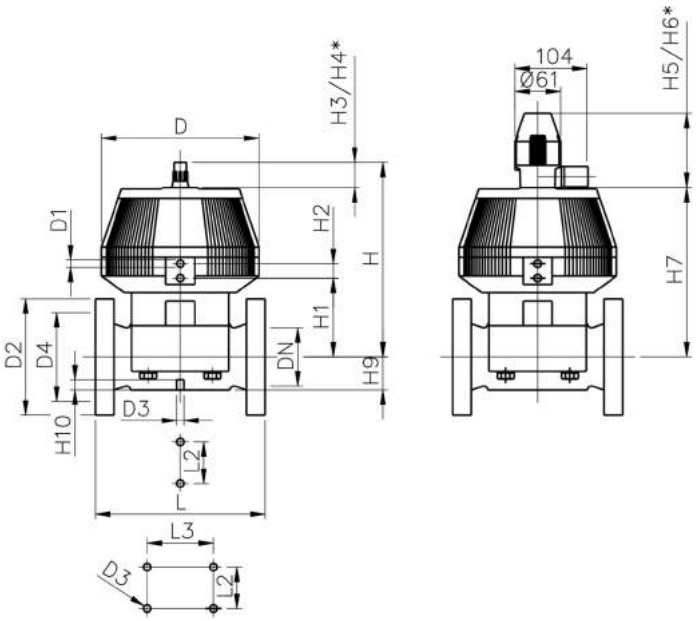

PF 3 39 212 109

Diaphragm valve type DIASTAR PVC-C
Series 025 FO (Fail safe to open)
With fixed flanges PVC-C metric

Model:

- Connecting dimension: ISO 7005 / EN 1092 / DIN 25 PN10 / BS4504

- With position indicator / Working pressure: **one side**

* With backing flanges PP-V

** Connecting dimensions DN80 and DN150 metric and Inch ANSI B16.5

	d [mm]	Size [inch]	DN [mm]	PN [bar]	kv-value (Δp=1 bar) [l/min]	EPDM Code	Weight [kg]	PTFE/EPDM Code	Weight [kg]
*	75	2 ½	65	10	992	**199 025 707**	13.600	**199 025 737**	13.600
**	90	3	80	10	1700	**199 025 708**	17.400	**199 025 738**	17.400
	110	4	100	6	2700	**199 025 709**	24.700	**199 025 739**	

	d [mm]	D [mm]	D1_G [inch]	D2 [mm]	D3[M] [mm]	D4 [mm]	H [mm]	H1 [mm]	H2 [mm]	H3 [mm]	H4 [mm]	H5 [mm]	H6 [mm]	H7 [mm]
*	75	280	¼	185	8	145	344	148	24	46	100	129	195	298
**	90	280	¼	200	12	160	348	150	24	46	100	129	195	302
	110	335	¼	225	12	180	395	176	24	46	100	129	195	349

	d [mm]	H9 [mm]	H10 [mm]	L [mm]	L2 [mm]
*	75	46	15	290	70
**	90	57	15	310	120
	110	69	20	350	120

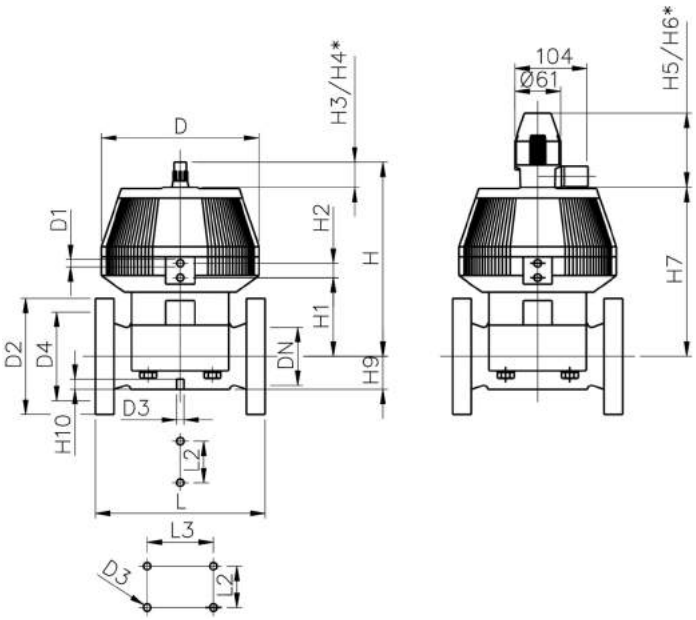

PF 3 39 212 110

Diaphragm valve type DIASTAR PVC-C
Series 025 DA (Double acting)
With fixed flanges PVC-C metric

Model:

- Connecting dimension: ISO 7005 / EN 1092 / DIN 25 PN10 / BS4504

- With position indicator / Working pressure: **one side**

* With backing flanges PP-V

** Connecting dimensions DN80 and DN150 metric and Inch ANSI B16.5

	d [mm]	**Size** [inch]	**DN** [mm]	**PN** [bar]	**kv-value (Δp=1 bar)** [l/min]	**EPDM Code**	**Weight** [kg]	**PTFE/EPDM Code**	**Weight** [kg]
*	75	2 ½	65	10	992	**199 025 717**	12.529	**199 025 747**	13.600
**	90	3	80	10	1700	**199 025 718**	17.400	**199 025 748**	17.400
	110	4	100	6	2700	**199 025 719**	24.700	**199 025 749**	24.700

	d [mm]	**D** [mm]	**D1_G** [inch]	**D2** [mm]	**D3[M]** [mm]	**D4** [mm]	**H** [mm]	**H1** [mm]	**H2** [mm]	**H3** [mm]	**H4** [mm]	**H5** [mm]	**H6** [mm]	**H7** [mm]
*	75	280	¼	185	8	145	344	148	24	46	100	129	195	298
**	90	280	¼	200	12	160	348	150	24	46	100	129	195	302
	110	335	¼	225	12	180	395	176	24	46	100	129	195	349

	d [mm]	**H9** [mm]	**H10** [mm]	**L** [mm]	**L2** [mm]
*	75	46	15	290	70
**	90	57	15	310	120
	110	69	20	350	120

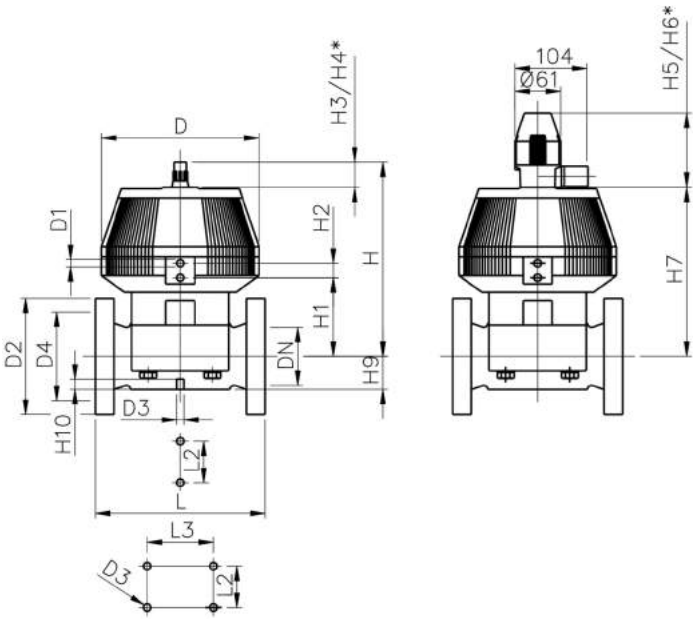

PF 3 39 212 111

Butterfly valves electric

Butterfly valve type 140 PVC-C 100-230V
Without manual override

Model:

- Voltage 100-230 V, 50-60 Hz
- Control range 90°<)
- Control time 15 s/90°<) EA31
- Control time 25 s/90°<) EA42
- Actuator with integrated emergency manual override standard
- Overall length according to EN 558, ISO 5752
- Connecting dimension: ISO 7005 PN 10, EN 1092 PN 10, DIN 2501 PN 10, ANSI/ ASME B 16.5 Class 150, BS 1560: 1989, BS 4504, JIS B 2220

d [mm]	Size [inch]	DN [mm]	PN [bar]	kv-value (Δp=1 bar) [l/min]	EPDM Code	SP	Weight [kg]	FPM Code	SP	Weight [kg]
63	2	50	10	1470	**199 140 202**	1	3.189	**199 140 222**	1	3.193
75	2 ½	65	10	2200	**199 140 203**	1	4.529	**199 140 223**	1	4.312
90	3	80	10	3000	**199 140 204**	1	4.484	**199 140 224**	1	4.491
110	4	100	10	6500	**199 140 205**	1	5.119	**199 140 225**	1	5.133
140	5	125	10	11500	**199 140 206**	1	4.719	**199 140 226**	1	4.737
160	6	150	10	16600	**199 140 207**	1	6.701	**199 140 227**	1	6.724
225	8	200	10	39600	**199 140 208**	1	12.966	**199 140 228**	1	12.994

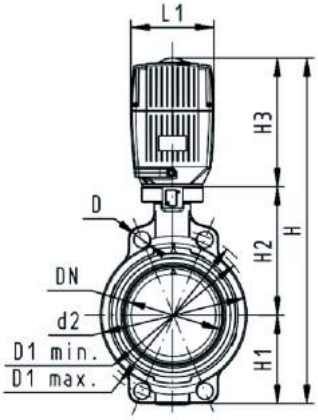

d [mm]	PTFE Code
63	**199 140 722**
75	**199 140 723**
90	**199 140 724**
110	**199 140 725**
140	**199 140 726**
160	**199 140 727**
225	**199 140 728**

d [mm]	Actuator unit type	d2 [mm]	D [mm]	D1 min. [mm]	D1 max. [mm]	H [mm]	H1 [mm]	H2 [mm]	H3 [mm]	L [mm]	L1 [mm]	L2 [mm]	Q1 [mm]
63	EA-31	104	19	120	125	400	77	134	188	45	122	180	40
75	EA-31	115	19	140	145	413	83	140	188	46	122	180	54
90	EA-31	131	19	150	160	428	89	146	188	49	122	180	67
110	EA-31	161	19	175	191	460	104	167	188	56	122	180	88
140	EA-31	187	23	210	216	487	117	181	188	64	122	180	113
160	EA-31	215	24	241	241	508	130	189	188	72	122	180	139
225	EA-42	267	23	290	295	575	158	210	208	73	122	180	178

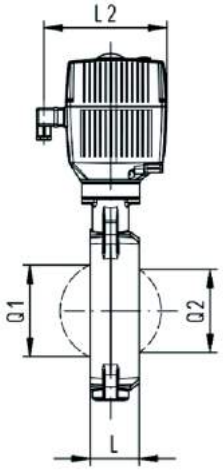

d [mm]	Q2 [mm]
63	
75	35
90	50
110	74
140	97
160	123
225	169

PF 3 39 643 033

Butterfly valve type 140 PVC-C 100-230V
With manual override

Model:

- Voltage 100-230 V, 50-60 Hz
- Control range 90°<)
- Control time 15 s/90°<) EA31
- Control time 25 s/90°<) EA42
- Actuator with integrated emergency manual override standard
- Overall length according to EN 558, ISO 5752
- Connecting dimension: ISO 7005 PN 10, EN 1092 PN 10, DIN 2501 PN 10, ANSI/ ASME B 16.5 Class 150, BS 1560: 1989, BS 4504, JIS B 2220

d [mm]	Size [inch]	DN [mm]	PN [bar]	kv-value (Δp=1 bar) [l/min]	EPDM Code	SP	Weight [kg]	FPM Code	SP	Weight [kg]
63	2	50	10	1470	**199 140 162**	1	5.678	**199 140 182**	1	4.233
75	2 ½	65	10	2200	**199 140 163**	1	5.801	**199 140 183**	1	5.812
90	3	80	10	3000	**199 140 164**	1	5.984	**199 140 184**	1	5.991
110	4	100	10	6500	**199 140 165**	1	6.619	**199 140 185**	1	6.633
140	5	125	10	11500	**199 140 166**	1	5.732	**199 140 186**	1	5.750
160	6	150	10	16600	**199 140 167**	1	8.201	**199 140 187**	1	8.224
225	8	200	10	39600	**199 140 168**	1	14.466	**199 140 188**	1	14.494

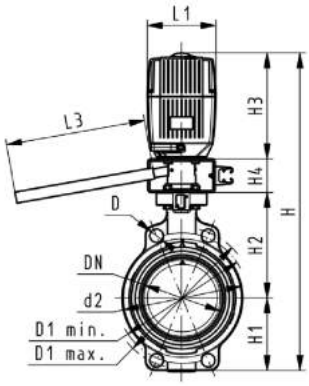

d [mm]	PTFE Code
63	**199 140 762**
75	**199 140 763**
90	**199 140 764**
110	**199 140 765**
140	**199 140 766**
160	**199 140 767**
225	**199 140 768**

d [mm]	Actuator unit type	d2 [mm]	D [mm]	D1 min. [mm]	D1 max. [mm]	H [mm]	H1 [mm]	H2 [mm]	H3 [mm]	H4 [mm]	L [mm]	L1 [mm]	L2 [mm]
63	EA-31	104	19	120	125	460	77	134	188	60	45	122	180
75	EA-31	115	19	140	145	473	83	140	188	60	46	122	180
90	EA-31	131	19	150	160	488	89	146	188	60	49	122	180
110	EA-31	161	19	175	191	520	104	167	188	60	56	122	180
140	EA-31	187	23	210	216	547	117	181	188	60	64	122	180
160	EA-31	215	24	241	241	568	130	189	188	60	72	122	180
225	EA-42	267	23	290	295	635	158	210	208	60	73	122	180

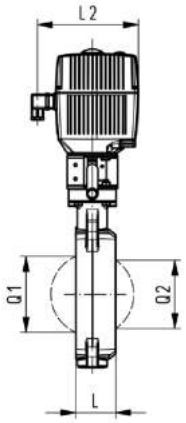

d [mm]	L3 [mm]	Q1 [mm]	Q2 [mm]
63	250	40	
75	250	54	35
90	250	67	50
110	250	88	74
140	250	113	97
160	250	139	123
225	250	178	169

PF 3 39 643 033

Butterfly valve type 140 PVC-C 24V
Without manual override

Model:

- Voltage 24 V AC/DC
- Control range 90°<)
- Control time 15 s/90°<) EA31
- Control time 25 s/90°<) EA42
- Actuator with integrated emergency manual override standard
- Overall length according to EN 558, ISO 5752
- Connecting dimension: ISO 7005 PN 10, EN 1092 PN 10, DIN 2501 PN 10, ANSI/ ASME B 16.5 Class 150, BS 1560: 1989, BS 4504, JIS B 2220

d [mm]	Size [inch]	DN [mm]	PN [bar]	kv-value (Δp=1 bar) [l/min]	EPDM Code	SP	Weight [kg]	FPM Code	SP	Weight [kg]
63	2	50	10	1470	**199 140 282**	1	3.189	**199 140 302**	1	3.193
75	2 ½	65	10	2200	**199 140 283**	1	4.301	**199 140 303**	1	4.312
90	3	80	10	3000	**199 140 284**	1	4.484	**199 140 304**	1	4.491
110	4	100	10	6500	**199 140 285**	1	5.119	**199 140 305**	1	5.133
140	5	125	10	11500	**199 140 286**	1	4.719	**199 140 306**	1	4.737
160	6	150	10	16600	**199 140 287**	1	6.701	**199 140 307**	1	6.724
225	8	200	10	39600	**199 140 288**	1	12.966	**199 140 308**	1	12.994

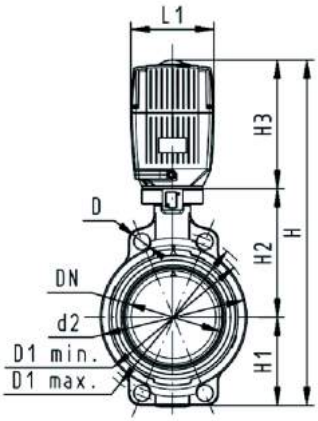

d [mm]	PTFE Code
63	**199 140 742**
75	**199 140 743**
90	**199 140 744**
110	**199 140 745**
140	**199 140 746**
160	**199 140 747**
225	**199 140 748**

d [mm]	Actuator unit type	d2 [mm]	D [mm]	D1 min. [mm]	D1 max. [mm]	H [mm]	H1 [mm]	H2 [mm]	H3 [mm]	L [mm]	L1 [mm]	L2 [mm]	Q1 [mm]
63	EA-31	104	19	120	125	400	77	134	188	45	122	180	40
75	EA-31	115	19	140	145	413	83	140	188	46	122	180	54
90	EA-31	131	19	150	160	428	89	146	188	49	122	180	67
110	EA-31	161	19	175	191	460	104	167	188	56	122	180	88
140	EA-31	187	23	210	216	487	117	181	188	64	122	180	113
160	EA-31	215	24	241	241	508	130	189	188	72	122	180	139
225	EA-42	267	23	290	295	575	158	210	208	73	122	180	178

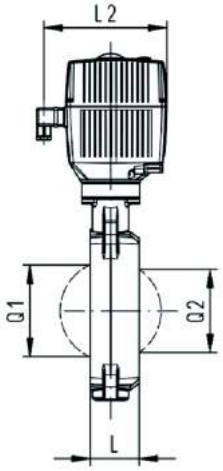

d [mm]	Q2 [mm]
63	
75	35
90	50
110	74
140	97
160	123
225	169

PF 3 39 643 033

Butterfly valve type 140 PVC-C 24V
With manual override

Model:

- Voltage 24 V AC/DC
- Control range 90°<)
- Control time 15 s/90°<) EA31
- Control time 25 s/90°<) EA42
- Actuator with integrated emergency manual override standard
- Overall length according to EN 558, ISO 5752
- Connecting dimension: ISO 7005 PN 10, EN 1092 PN 10, DIN 2501 PN 10, ANSI/ ASME B 16.5 Class 150, BS 1560: 1989, BS 4504, JIS B 2220

d [mm]	Size [inch]	DN [mm]	PN [bar]	kv-value (Δp=1 bar) [l/min]	EPDM Code	SP	Weight [kg]	FPM Code	SP	Weight [kg]
63	2	50	10	1470	**199 140 242**	1	5.678	**199 140 262**	1	4.233
75	2 ½	65	10	2200	**199 140 243**	1	5.801	**199 140 263**	1	5.812
90	3	80	10	3000	**199 140 244**	1	5.984	**199 140 264**	1	5.991
110	4	100	10	6500	**199 140 245**	1	6.619	**199 140 265**	1	6.633
140	5	125	10	11500	**199 140 246**	1	5.732	**199 140 266**	1	5.750
160	6	150	10	16600	**199 140 247**	1	8.201	**199 140 267**	1	8.224
225	8	200	10	39600	**199 140 248**	1	14.466	**199 140 268**	1	14.494

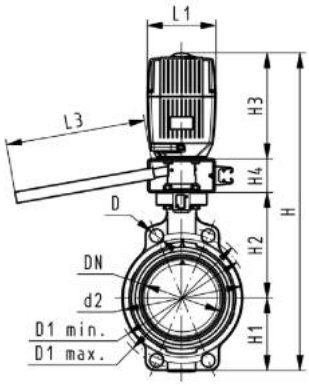

d [mm]	PTFE Code
63	**199 140 782**
75	**199 140 783**
90	**199 140 784**
110	**199 140 785**
140	**199 140 786**
160	**199 140 787**
225	**199 140 788**

d [mm]	Actuator unit type	d2 [mm]	D [mm]	D1 min. [mm]	D1 max. [mm]	H [mm]	H1 [mm]	H2 [mm]	H3 [mm]	H4 [mm]	L [mm]	L1 [mm]	L2 [mm]
63	EA-31	104	19	120	125	460	77	134	188	60	45	122	180
75	EA-31	115	19	140	145	473	83	140	188	60	46	122	180
90	EA-31	131	19	150	160	488	89	146	188	60	49	122	180
110	EA-31	161	19	175	191	520	104	167	188	60	56	122	180
140	EA-31	187	23	210	216	547	117	181	188	60	64	122	180
160	EA-31	215	24	241	241	568	130	189	188	60	72	122	180
225	EA-42	267	23	290	295	635	158	210	208	60	73	122	180

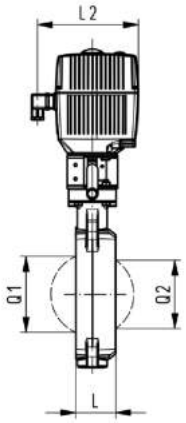

d [mm]	L3 [mm]	Q1 [mm]	Q2 [mm]
63	250	40	
75	250	54	35
90	250	67	50
110	250	88	74
140	250	113	97
160	250	139	123
225	250	178	169

PF 3 39 643 033

Lugstyle butterfly valve type 141 PVC-C 100-230V Without manual override

Model:

- Outer body in GGG-40.3 epoxy-coated
- Voltage 100-230 V, 50-60 Hz
- Control range 90°<)
- Control time 15 s/90°<) EA31
- Control time 25 s/90°<) EA42
- Actuator with integrated emergency manual override standard
- Overall length according to EN 558, ISO 5752
- Connecting dimension: ISO 7005 PN10, EN 1092 PN10, DIN 2501 PN10

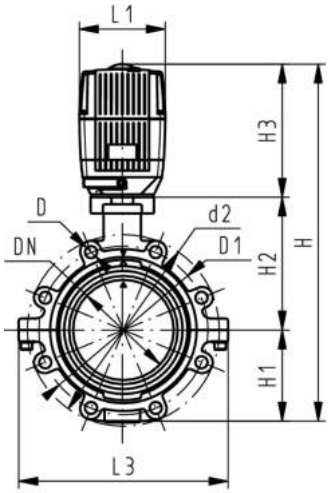

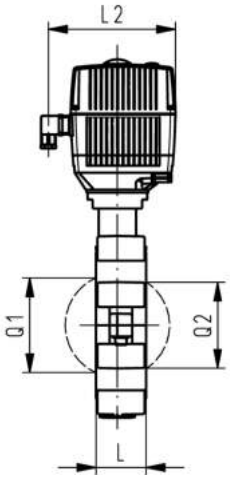

d [mm]	Size [inch]	DN [mm]	PN [bar]	kv-value (Δp=1 bar) [l/min]	EPDM Code	SP	Weight [kg]	FPM Code	SP	Weight [kg]
63	2	50	10	1470	**199 141 202**	1	6.281	**199 141 222**	1	6.281
75	2 ½	65	10	2200	**199 141 203**	1	6.648	**199 141 223**	1	6.648
90	3	80	10	3000	**199 141 204**	1	7.702	**199 141 224**	1	7.702
110	4	100	10	6500	**199 141 205**	1	9.217	**199 141 225**	1	9.217
140	5	125	10	11500	**199 141 206**	1	11.205	**199 141 226**	1	11.205
160	6	150	10	16600	**199 141 207**	1	13.184	**199 141 227**	1	13.184
225	8	200	10	39600	**199 141 208**	1	22.942	**199 141 228**	1	22.942

d [mm]	PTFE Code
63	**199 141 722**
75	**199 141 723**
90	**199 141 724**
110	**199 141 725**
140	**199 141 726**
160	**199 141 727**
225	**199 141 728**

d [mm]	Actuator unit type	d2 [mm]	D	D1 [mm]	H [mm]	H1 [mm]	H2 [mm]	H3 [mm]	L [mm]	L1 [mm]	L2 [mm]	L3 [mm]	Q1 [mm]
63	EA-31	150	M16	125	399	77	134	188	45	122	180	150	40
75	EA-31	170	M16	145	411	83	140	188	46	122	180	160	54
90	EA-31	184	M16	160	423	89	146	188	49	122	180	205	67
110	EA-31	216	M16	180	459	104	167	188	56	122	180	244	88
140	EA-31	246	M16	210	486	117	181	188	64	122	180	272	113
160	EA-31	273	M20	240	507	130	189	188	72	122	180	297	139
225	EA-42	334	M20	295	576	158	210	208	73	122	180	360	178

d [mm]	Q2 [mm]
63	
75	35
90	50
110	74
140	97
160	123
225	169

PF 3 39 643 034

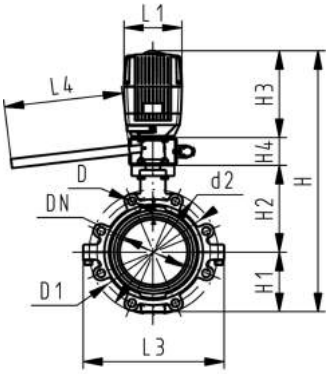

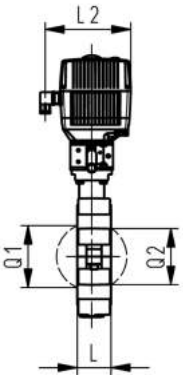

Lugstyle butterfly valve type 141 PVC-C 100-230V With manual override

Model:

- Outer body in GGG-40.3 epoxy-coated
- Voltage 100-230 V, 50-60 Hz
- Control range 90°<)
- Control time 15 s/90°<) EA31
- Control time 25 s/90°<) EA42
- Actuator with integrated emergency manual override standard
- Overall length according to EN 558, ISO 5752
- Connecting dimension: ISO 7005 PN10, EN 1092 PN10, DIN 2501 PN10

d [mm]	Size [inch]	DN [mm]	PN [bar]	kv-value (Δp=1 bar) [l/min]	EPDM Code	SP	Weight [kg]	FPM Code	SP	Weight [kg]
63	2	50	10	1470	**199 141 162**	1	7.781	**199 141 182**	1	7.781
75	2 ½	65	10	2200	**199 141 163**	1	8.148	**199 141 183**	1	8.148
90	3	80	10	3000	**199 141 164**	1	9.202	**199 141 184**	1	9.202
110	4	100	10	6500	**199 141 165**	1	10.717	**199 141 185**	1	10.717
140	5	125	10	11500	**199 141 166**	1	12.705	**199 141 186**	1	12.705
160	6	150	10	16600	**199 141 167**	1	14.684	**199 141 187**	1	14.684
225	8	200	10	39600	**199 141 168**	1	24.442	**199 141 188**	1	24.442

d [mm]	PTFE Code
63	**199 141 762**
75	**199 141 763**
90	**199 141 764**
110	**199 141 765**
140	**199 141 766**
160	**199 141 767**
225	**199 141 768**

d [mm]	Actuator unit type	d2 [mm]	D	D1 [mm]	H [mm]	H1 [mm]	H2 [mm]	H3 [mm]	H4 [mm]	L [mm]	L1 [mm]	L2 [mm]	L3 [mm]
63	EA-31	150	M16	125	459	77	134	188	60	45	122	180	150
75	EA-31	170	M16	145	471	83	140	188	60	46	122	180	160
90	EA-31	184	M16	160	483	89	146	188	60	49	122	180	205
110	EA-31	216	M16	180	519	104	167	188	60	56	122	180	244
140	EA-31	246	M16	210	546	117	181	188	60	64	122	180	272
160	EA-31	273	M20	240	567	130	189	188	60	72	122	180	297
225	EA-42	334	M20	295	636	158	210	208	60	73	122	180	360

d [mm]	L4 [mm]	Q1 [mm]	Q2 [mm]
63	200	40	
75	200	54	35
90	200	67	50
110	250	88	74
140	250	113	97
160	250	139	123
225	250	178	169

PF 3 39 643 034

Lugstyle butterfly valve type 141 PVC-C 24V Without manual override

Model:

- Outer body in GGG-40.3 epoxy-coated
- Voltage 24 V AC/DC
- Control range 90°<)
- Control time 15 s/90°<) EA31
- Control time 25 s/90°<) EA42
- Actuator with integrated emergency manual override standard
- Overall length according to EN 558, ISO 5752
- Connecting dimension: ISO 7005 PN10, EN 1092 PN10, DIN 2501 PN10

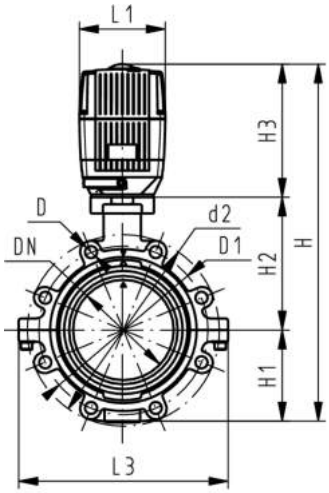

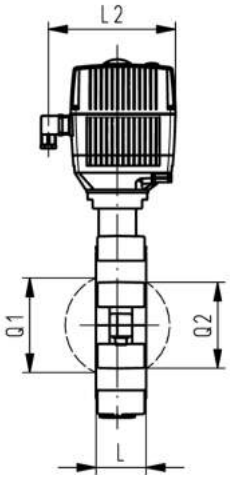

d [mm]	Size [inch]	DN [mm]	PN [bar]	kv-value (Δp=1 bar) [l/min]	EPDM Code	SP	Weight [kg]	FPM Code	SP	Weight [kg]
63	2	50	10	1470	**199 141 282**	1	6.281	**199 141 302**	1	6.281
75	2 ½	65	10	2200	**199 141 283**	1	6.648	**199 141 303**	1	6.648
90	3	80	10	3000	**199 141 284**	1	7.702	**199 141 304**	1	7.702
110	4	100	10	6500	**199 141 285**	1	9.217	**199 141 305**	1	9.217
140	5	125	10	11500	**199 141 286**	1	11.205	**199 141 306**	1	11.205
160	6	150	10	16600	**199 141 287**	1	13.184	**199 141 307**	1	13.184
225	8	200	10	39600	**199 141 288**	1	22.942	**199 141 308**	1	22.942

d [mm]	PTFE Code
63	**199 141 742**
75	**199 141 743**
90	**199 141 744**
110	**199 141 745**
140	**199 141 746**
160	**199 141 747**
225	**199 141 748**

d [mm]	Actuator unit type	d2 [mm]	D	D1 [mm]	H [mm]	H1 [mm]	H2 [mm]	H3 [mm]	L [mm]	L1 [mm]	L2 [mm]	L3 [mm]	Q1 [mm]
63	EA-31	150	M16	125	399	77	134	188	45	122	180	150	40
75	EA-31	170	M16	145	411	83	140	188	46	122	180	160	54
90	EA-31	184	M16	160	423	89	146	188	49	122	180	205	67
110	EA-31	216	M16	180	459	104	167	188	56	122	180	244	88
140	EA-31	246	M16	210	486	117	181	188	64	122	180	272	113
160	EA-31	273	M20	240	507	130	189	188	72	122	180	297	139
225	EA-42	334	M20	295	576	158	210	208	73	122	180	360	178

d [mm]	Q2 [mm]
63	
75	35
90	50
110	74
140	97
160	123
225	169

PF 3 39 643 034

Lugstyle butterfly valve type 141 PVC-C 24V
With manual override

Model:

- Outer body in GGG-40.3 epoxy-coated
- Voltage 24 V AC/DC
- Control range 90°<)
- Control time 15 s/90°<) EA31
- Control time 25 s/90°<) EA42
- Actuator with integrated emergency manual override standard
- Overall length according to EN 558, ISO 5752
- Connecting dimension: ISO 7005 PN10, EN 1092 PN10, DIN 2501 PN10

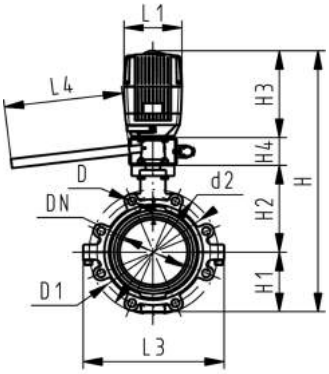

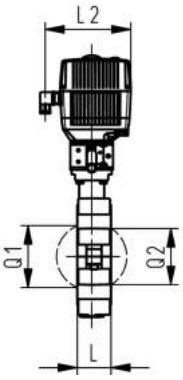

d [mm]	Size [inch]	DN [mm]	PN [bar]	kv-value (Δp=1 bar) [l/min]	EPDM Code	SP	Weight [kg]	FPM Code	SP	Weight [kg]
63	2	50	10	1470	**199 141 242**	1	7.781	**199 141 262**	1	7.781
75	2 ½	65	10	2200	**199 141 243**	1	8.148	**199 141 263**	1	8.148
90	3	80	10	3000	**199 141 244**	1	9.202	**199 141 264**	1	9.202
110	4	100	10	6500	**199 141 245**	1	10.717	**199 141 265**	1	10.717
140	5	125	10	11500	**199 141 246**	1	12.705	**199 141 266**	1	12.705
160	6	150	10	16600	**199 141 247**	1	14.684	**199 141 267**	1	14.684
225	8	200	10	39600	**199 141 248**	1	24.442	**199 141 268**	1	24.442

d [mm]	PTFE Code
63	**199 141 782**
75	**199 141 783**
90	**199 141 784**
110	**199 141 785**
140	**199 141 786**
160	**199 141 787**
225	**199 141 788**

d [mm]	Actuator unit type	d2 [mm]	D	D1 [mm]	H [mm]	H1 [mm]	H2 [mm]	H3 [mm]	H4 [mm]	L [mm]	L1 [mm]	L2 [mm]	L3 [mm]
63	EA-31	150	M16	125	459	77	134	188	60	45	122	180	150
75	EA-31	170	M16	145	471	83	140	188	60	46	122	180	160
90	EA-31	184	M16	160	483	89	146	188	60	49	122	180	205
110	EA-31	216	M16	180	519	104	167	188	60	56	122	180	244
140	EA-31	246	M16	210	546	117	181	188	60	64	122	180	272
160	EA-31	273	M20	240	567	130	189	188	60	72	122	180	297
225	EA-42	334	M20	295	636	158	210	208	60	73	122	180	360

d [mm]	L4 [mm]	Q1 [mm]	Q2 [mm]
63	200	40	
75	200	54	35
90	200	67	50
110	250	88	74
140	250	113	97
160	250	139	123
225	250	178	169

PF 3 39 643 034

Butterfly valves pneumatic

Butterfly valve type 240 PVC-C
FC (Fail safe to close)
Without manual override

Model:

- Control range 90°<)
- Overall length according to EN 558, ISO 5752
- Connecting dimension: ISO 7005 PN 10, EN 1092 PN 10, DIN 2501 PN 10, ANSI/ ASME B 16.5 Class 150, BS 1560: 1989, BS 4504, JIS B 2220

d [mm]	Size [inch]	DN [mm]	PN [bar]	kv-value (Δp=1 bar) [l/min]	EPDM Code	SP	Weight [kg]	FPM Code	SP	Weight [kg]
63	2	50	10	1470	**199 240 162**	1	3.218	**199 240 182**	1	3.218
75	2 ½	65	10	2200	**199 240 163**	1	3.341	**199 240 183**	1	3.352
90	3	80	10	3000	**199 240 164**	1	3.524	**199 240 184**	1	3.531
110	4	100	10	6500	**199 240 165**	1	5.271	**199 240 185**	1	5.371
140	5	125	10	11500	**199 240 166**	1	7.169	**199 240 186**	1	5.943
160	6	150	10	16600	**199 240 167**	1	10.184	**199 240 187**	1	10.285
225	8	200	10	39600	**199 240 168**	1	14.466	**199 240 188**	1	14.494

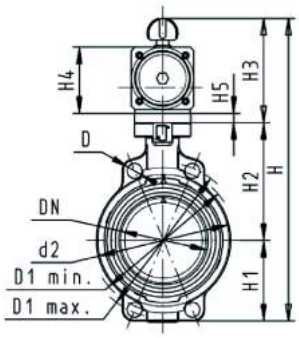

d [mm]	PTFE Code
63	**199 240 642**
75	**199 240 643**
90	**199 240 644**
110	**199 240 645**
140	**199 240 646**
160	**199 240 647**
225	**199 240 648**

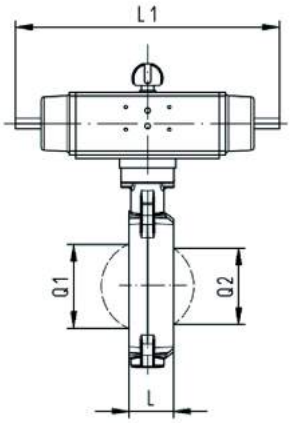

d [mm]	Actuator unit type	d2 [mm]	D [mm]	D1 min. [mm]	D1 max. [mm]	H [mm]	H1 [mm]	H2 [mm]	H3 [mm]	H4 [mm]	H5 [mm]	L [mm]	L1 [mm]
63	PA-30 FC	104	19	120	125	327	77	134	117	70	15	45	276
75	PA-30 FC	115	19	140	145	340	83	140	117	70	15	46	276
90	PA-35 FC	131	19	150	160	361	89	146	126	78	15	49	326
110	PA-40 FC	161	19	175	191	400	104	167	129	86		56	370
140	PA-45 FC	187	23	210	216	436	117	181	139	96		64	411
160	PA-50 FC	215	24	241	241	468	130	189	149	106		72	423
225	PA-55 FC	267	23	290	295	529	158	210	161	118		73	452

d [mm]	L2 [mm]	Q1 [mm]	Q2 [mm]
63	65	40	
75	65	54	35
90	72	67	50
110	80	88	74
140	90	113	97
160	100	139	123
225	112	178	169

PF 3 39 644 033

Butterfly valve type 240 PVC-C FO (Fail safe to open) Without manual override

Model:

- Control range 90°<)
- Overall length according to EN 558, ISO 5752
- Connecting dimension: ISO 7005 PN 10, EN 1092 PN 10, DIN 2501 PN 10, ANSI/ ASME B 16.5 Class 150, BS 1560: 1989, BS 4504, JIS B 2220

d [mm]	Size [inch]	DN [mm]	PN [bar]	kv-value (Δp=1 bar) [l/min]	EPDM Code	SP	Weight [kg]	FPM Code	SP	Weight [kg]
63	2	50	10	1470	**199 240 202**	1	3.439	**199 240 222**	1	3.443
75	2 ½	65	10	2200	**199 240 203**	1	3.341	**199 240 223**	1	3.352
90	3	80	10	3000	**199 240 204**	1	3.524	**199 240 224**	1	3.531
110	4	100	10	6500	**199 240 205**	1	5.357	**199 240 225**	1	5.371
140	5	125	10	11500	**199 240 206**	1	7.169	**199 240 226**	1	7.187
160	6	150	10	16600	**199 240 207**	1	10.262	**199 240 227**	1	10.285
225	8	200	10	39600	**199 240 208**	1	14.466	**199 240 228**	1	14.494

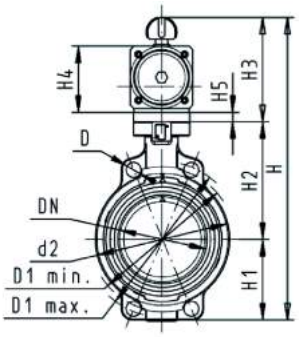

d [mm]	PTFE Code
63	**199 240 662**
75	**199 240 663**
90	**199 240 664**
110	**199 240 665**
140	**199 240 666**
160	**199 240 667**
225	**199 240 668**

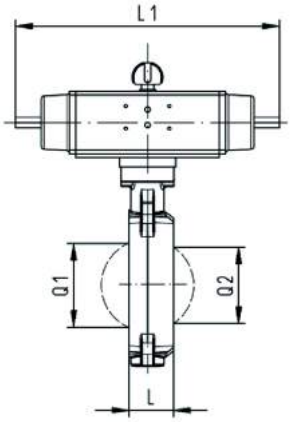

d [mm]	Actuator unit type	d2 [mm]	D [mm]	D1 min. [mm]	D1 max. [mm]	H [mm]	H1 [mm]	H2 [mm]	H3 [mm]	H4 [mm]	H5 [mm]	L [mm]	L1 [mm]
63	PA-30 FO	104	19	120	125	327	77	134	117	70	15	45	276
75	PA-30 FO	115	19	140	145	340	83	140	117	70	15	46	276
90	PA-35 FO	131	19	150	160	361	89	146	126	78	15	49	326
110	PA-40 FO	161	19	175	191	400	104	167	129	86		56	370
140	PA-45 FO	187	23	210	216	436	117	181	139	96		64	411
160	PA-50 FO	215	24	241	241	468	130	189	149	106		72	423
225	PA-55 FO	267	23	290	295	529	158	210	161	118		73	452

d [mm]	L2 [mm]	Q1 [mm]	Q2 [mm]
63	65	40	
75	65	54	35
90	72	67	50
110	80	88	74
140	90	113	97
160	100	139	123
225	112	178	169

PF 3 39 644 033

Butterfly valve type 240 PVC-C DA (Double acting) Without manual override

Model:

- Control range 90°<)
- Overall length according to EN 558, ISO 5752
- Connecting dimension: ISO 7005 PN 10, EN 1092 PN 10, DIN 2501 PN 10, ANSI/ ASME B 16.5 Class 150, BS 1560: 1989, BS 4504, JIS B 2220

d [mm]	Size [inch]	DN [mm]	PN [bar]	kv-value (Δp=1 bar) [l/min]	EPDM Code	SP	Weight [kg]	FPM Code	SP	Weight [kg]
63	2	50	10	1470	**199 240 242**	1	5.184	**199 240 262**	1	2.293
75	2 ½	65	10	2200	**199 240 243**	1	2.191	**199 240 263**	1	2.202
90	3	80	10	3000	**199 240 244**	1	2.884	**199 240 264**	1	2.862
110	4	100	10	6500	**199 240 245**	1	3.609	**199 240 265**	1	3.623
140	5	125	10	11500	**199 240 246**	1	4.419	**199 240 266**	1	4.500
160	6	150	10	16600	**199 240 247**	1	6.741	**199 240 267**	1	6.764
225	8	200	10	39600	**199 240 248**	1	8.466	**199 240 268**	1	8.494

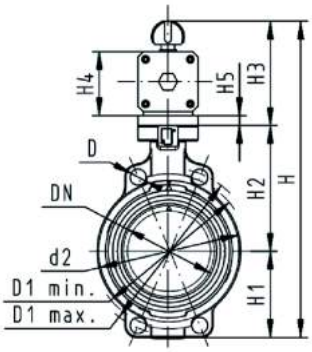

d [mm]	PTFE Code
63	**199 240 682**
75	**199 240 683**
90	**199 240 684**
110	**199 240 685**
140	**199 240 686**
160	**199 240 687**
225	**199 240 688**

d [mm]	Actuator unit type	d2 [mm]	D [mm]	D1 min. [mm]	D1 max. [mm]	H [mm]	H1 [mm]	H2 [mm]	H3 [mm]	H4 [mm]	H5 [mm]	L [mm]	L1 [mm]
63	PA-35 DA	104	19	120	125	317	77	134	107	60	15	45	177
75	PA-35 DA	115	19	140	145	330	83	140	107	60	15	46	177
90	PA-40 DA	131	19	150	160	348	89	146	113	66	15	49	190
110	PA-45 DA	161	19	175	191	372	104	167	102	71		56	235
140	PA-45 DA	187	23	210	216	408	117	181	111	78		64	235
160	PA-55 DA	215	24	241	241	448	130	189	129	86		72	279
225	PA-55 DA	267	23	290	295	507	158	210	139	96		73	279

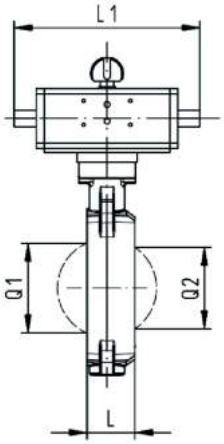

d [mm]	L2 [mm]	Q1 [mm]	Q2 [mm]
63	55	40	
75	55	54	35
90	60	67	50
110	65	88	74
140	72	113	97
160	80	139	123
225	90	178	169

PF 3 39 644 031

Lugstyle butterfly valve type 241 PVC-C FC (Fail safe to close) Without manual override

Model:

- Outer body in GGG-40.3 epoxy-coated
- Control range 90°<)
- Overall length according to EN 558, ISO 5752
- Connecting dimension: ISO 7005 PN10, EN 1092 PN10, DIN 2501 PN10

d [mm]	Size [inch]	DN [mm]	PN [bar]	kv-value (Δp=1 bar) [l/min]	EPDM Code	SP	Weight [kg]	FPM Code	SP	Weight [kg]
63	2	50	10	1470	**199 241 162**	0	5.321	**199 241 182**	0	5.321
75	2 ½	65	10	2200	**199 241 163**	0	5.688	**199 241 183**	0	5.688
90	3	80	10	3000	**199 241 164**	0	6.742	**199 241 184**	0	6.742
110	4	100	10	6500	**199 241 165**	0	9.455	**199 241 185**	0	9.455
140	5	125	10	11500	**199 241 166**	0	12.445	**199 241 186**	0	12.445
160	6	150	10	16600	**199 241 167**	1	16.745	**199 241 187**	1	16.745
225	8	200	10	39600	**199 241 168**	0	24.442	**199 241 188**	0	24.442

d [mm]	PTFE Code
63	**199 241 642**
75	**199 241 643**
90	**199 241 644**
110	**199 241 645**
140	**199 241 646**
160	**199 241 647**
225	**199 241 648**

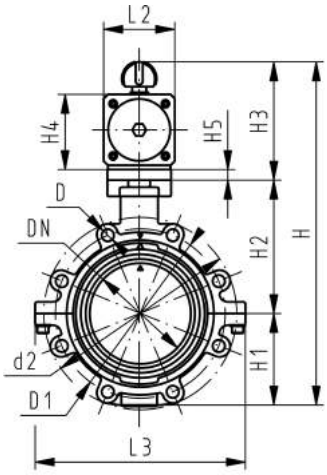

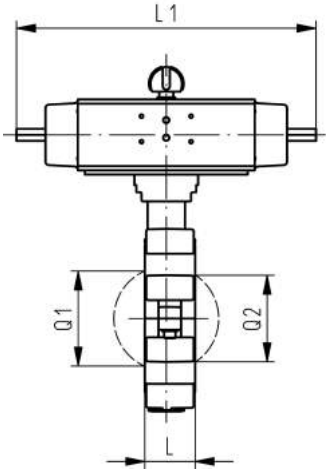

d [mm]	Actuator unit type	d2 [mm]	D	D1 [mm]	H [mm]	H1 [mm]	H2 [mm]	H3 [mm]	H4 [mm]	H5 [mm]	L [mm]	L1 [mm]	L2 [mm]
63	PA-30 FC	150	M16	125	328	77	134	117	70	15	45	276	65
75	PA-30 FC	170	M16	145	340	83	140	117	70	15	46	276	65
90	PA-35 FC	184	M16	160	361	89	146	126	78	15	49	326	72
110	PA-40 FC	216	M16	180	400	104	167	129	86		56	370	80
140	PA-45 FC	246	M16	210	437	117	181	139	96		64	411	90
160	PA-50 FC	273	M20	240	468	130	189	149	106		72	423	100
225	PA-55 FC	334	M20	295	529	158	210	161	118		73	452	112

d [mm]	L3 [mm]	Q1 [mm]	Q2 [mm]
63	150	40	
75	160	54	35
90	205	67	50
110	244	88	74
140	272	113	97
160	297	139	123
225	360	178	169

PF 3 39 644 034

Lugstyle butterfly valve type 241 PVC-C FO (Fail safe to open) Without manual override

Model:

- Outer body in GGG-40.3 epoxy-coated
- Control range 90°<)
- Overall length according to EN 558, ISO 5752
- Connecting dimension: ISO 7005 PN10, EN 1092 PN10, DIN 2501 PN10

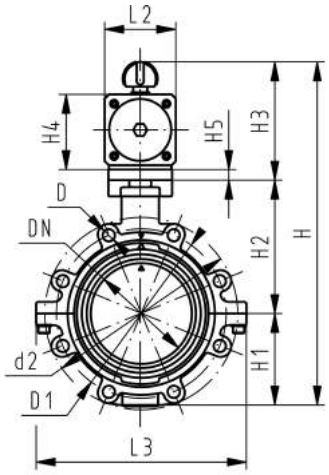

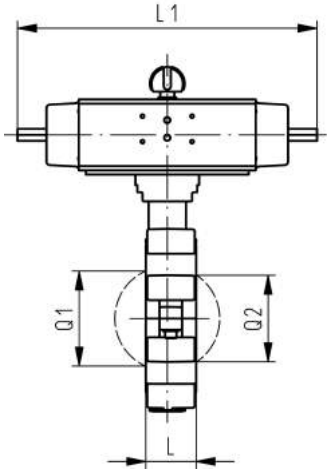

d [mm]	Size [inch]	DN [mm]	PN [bar]	kv-value (Δp=1 bar) [l/min]	EPDM Code	SP	Weight [kg]	FPM Code	SP	Weight [kg]
63	2	50	10	1470	**199 241 202**	0	5.321	**199 241 222**	0	5.321
75	2 ½	65	10	2200	**199 241 203**	0	5.688	**199 241 223**	0	5.688
90	3	80	10	3000	**199 241 204**	0	6.742	**199 241 224**	0	6.742
110	4	100	10	6500	**199 241 205**	0	9.455	**199 241 225**	0	9.455
140	5	125	10	11500	**199 241 206**	0	12.445	**199 241 226**	0	12.445
160	6	150	10	16600	**199 241 207**	1	16.745	**199 241 227**	1	16.745
225	8	200	10	39600	**199 241 208**	0	24.442	**199 241 228**	0	24.442

d [mm]	PTFE Code
63	**199 241 662**
75	**199 241 663**
90	**199 241 664**
110	**199 241 665**
140	**199 241 666**
160	**199 241 667**
225	**199 241 668**

d [mm]	Actuator unit type	d2 [mm]	D	D1 [mm]	H [mm]	H1 [mm]	H2 [mm]	H3 [mm]	H4 [mm]	H5 [mm]	L [mm]	L1 [mm]	L2 [mm]
63	PA-30 FO	150	M16	125	328	77	134	117	70	15	45	276	65
75	PA-30 FO	170	M16	145	340	83	140	117	70	15	46	276	65
90	PA-35 FO	184	M16	160	361	89	146	126	78	15	49	326	72
110	PA-40 FO	216	M16	180	400	104	167	129	86		56	370	80
140	PA-45 FO	246	M16	210	437	117	181	139	96		64	411	90
160	PA-50 FO	273	M20	240	468	130	189	149	106		72	423	100
225	PA-55 FO	334	M20	295	529	158	210	161	118		73	452	112

d [mm]	L3 [mm]	Q1 [mm]	Q2 [mm]
63	150	40	
75	160	54	35
90	205	67	50
110	244	88	74
140	272	113	97
160	297	139	123
225	360	178	169

PF 3 39 644 034

Lugstyle butterfly valve type 241 PVC-C DA (Double acting) Without manual override

Model:

- Outer body in GGG-40.3 epoxy-coated
- Control range 90°<)
- Overall length according to EN 558, ISO 5752
- Connecting dimension: ISO 7005 PN10, EN 1092 PN10, DIN 2501 PN10

d [mm]	Size [inch]	DN [mm]	PN [bar]	kv-value (Δp=1 bar) [l/min]	EPDM Code	SP	Weight [kg]	FPM Code	SP	Weight [kg]
63	2	50	10	1470	**199 241 242**	0	4.171	**199 241 262**	0	4.171
75	2 ½	65	10	2200	**199 241 243**	0	4.538	**199 241 263**	0	4.538
90	3	80	10	3000	**199 241 244**	0	6.073	**199 241 264**	0	6.073
110	4	100	10	6500	**199 241 245**	0	7.707	**199 241 265**	0	7.707
140	5	125	10	11500	**199 241 246**	0	9.695	**199 241 266**	0	9.695
160	6	150	10	16600	**199 241 247**	0	13.224	**199 241 267**	0	13.224
225	8	200	10	39600	**199 241 248**	0	18.442	**199 241 268**	0	18.442

d [mm]	PTFE Code
63	**199 241 682**
75	**199 241 683**
90	**199 241 684**
110	**199 241 685**
140	**199 241 686**
160	**199 241 687**
225	**199 241 688**

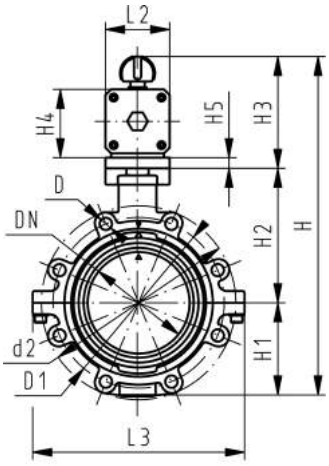

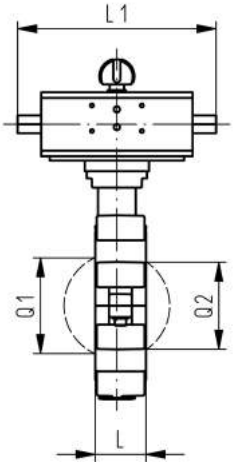

d [mm]	Actuator unit type	d2 [mm]	D	D1 [mm]	H [mm]	H1 [mm]	H2 [mm]	H3 [mm]	H4 [mm]	H5 [mm]	L [mm]	L1 [mm]	L2 [mm]
63	PA-35 DA	150	M16	125	318	77	134	107	60	15	45	177	55
75	PA-35 DA	170	M16	145	330	83	140	107	60	15	46	177	55
90	PA-40 DA	184	M16	160	348	89	146	113	66	15	49	190	60
110	PA-45 DA	216	M16	180	373	104	167	102	71		56	235	65
140	PA-45 DA	246	M16	210	409	117	181	111	78		64	235	72
160	PA-55 DA	273	M20	240	448	130	189	129	86		72	279	80
225	PA-55 DA	334	M20	295	507	158	210	139	96		73	279	90

d [mm]	L3 [mm]	Q1 [mm]	Q2 [mm]
63	150	40	
75	160	54	35
90	205	67	50
110	244	88	74
140	272	113	97
160	297	139	123
225	360	178	169

PF 3 39 644 034

Index

Code	Page
161 486 100	77
161 486 101	77
161 486 102	77
161 486 103	77
161 486 104	77
161 486 105	77
161 486 106	77
161 486 107	77
163 017 130	6
163 017 131	6
163 017 132	6
163 017 133	6
163 017 134	6
163 017 135	6
163 017 136	6
163 017 137	6
163 017 138	6
163 017 139	6
163 017 142	6
163 017 187	6
163 017 188	6
163 017 189	6
163 017 192	6
163 017 195	6
163 305 302	77
163 305 303	77
163 305 304	77
163 305 305	77
163 305 306	77
163 305 307	77
163 305 317	77
163 305 318	77
163 305 319	77
163 305 320	77
163 305 321	77
163 305 322	77
163 317 024	60
163 317 025	60
163 317 039	60
163 317 040	60
163 317 523	60
163 317 538	60
163 514 012	58
163 514 013	58
163 514 014	58
163 514 015	58
163 514 016	58
163 514 017	58
163 514 032	58
163 514 033	58
163 514 034	58
163 514 035	58
163 514 036	58
163 514 037	58
163 515 012	58
163 515 013	58
163 515 014	58
163 515 015	58
163 515 016	58
163 515 017	58
163 515 032	58
163 515 033	58
163 515 034	58
163 515 035	58
163 515 036	58
163 515 037	58
163 517 112	59
163 517 113	59

Code	Page
163 517 114	59
163 517 115	59
163 517 116	59
163 517 117	59
163 517 132	59
163 517 133	59
163 517 134	59
163 517 135	59
163 517 136	59
163 517 137	59
163 543 001	51
163 543 002	51
163 543 003	51
163 543 004	51
163 543 005	51
163 543 006	51
163 543 007	51
163 543 011	51
163 543 012	51
163 543 013	51
163 543 014	51
163 543 015	51
163 543 016	51
163 543 017	51
163 543 021	53
163 543 022	53
163 543 023	53
163 543 024	53
163 543 025	53
163 543 026	53
163 543 027	53
163 543 031	53
163 543 032	53
163 543 033	53
163 543 034	53
163 543 035	53
163 543 036	53
163 543 037	53
163 543 041	54
163 543 042	54
163 543 043	54
163 543 044	54
163 543 045	54
163 543 046	54
163 543 047	54
163 543 051	54
163 543 052	54
163 543 053	54
163 543 054	54
163 543 055	54
163 543 056	54
163 543 057	54
163 543 081	57
163 543 082	57
163 543 083	57
163 543 084	57
163 543 085	57
163 543 086	57
163 543 087	57
163 543 091	57
163 543 092	57
163 543 093	57
163 543 094	57
163 543 095	57
163 543 096	57
163 543 097	57
163 543 101	55
163 543 102	55

Code	Page
163 543 103	55
163 543 104	55
163 543 105	55
163 543 106	55
163 543 107	55
163 543 111	55
163 543 112	55
163 543 113	55
163 543 114	55
163 543 115	55
163 543 116	55
163 543 117	55
163 543 201	45
163 543 202	45
163 543 203	45
163 543 204	45
163 543 205	45
163 543 206	45
163 543 207	45
163 543 211	45
163 543 212	45
163 543 213	45
163 543 214	45
163 543 215	45
163 543 216	45
163 543 217	45
163 543 221	47
163 543 222	47
163 543 223	47
163 543 224	47
163 543 225	47
163 543 226	47
163 543 227	47
163 543 231	47
163 543 232	47
163 543 233	47
163 543 234	47
163 543 235	47
163 543 236	47
163 543 237	47
163 543 241	48
163 543 242	48
163 543 243	48
163 543 244	48
163 543 245	48
163 543 246	48
163 543 247	48
163 543 251	48
163 543 252	48
163 543 253	48
163 543 254	48
163 543 255	48
163 543 256	48
163 543 257	48
163 543 301	49
163 543 302	49
163 543 303	49
163 543 304	49
163 543 305	49
163 543 306	49
163 543 307	49
163 543 311	49
163 543 312	49
163 543 313	49
163 543 314	49
163 543 315	49
163 543 316	49
163 543 317	49

Index

Code	Page
163 543 381	52
163 543 382	52
163 543 383	52
163 543 384	52
163 543 385	52
163 543 386	52
163 543 387	52
163 543 391	52
163 543 392	52
163 543 393	52
163 543 394	52
163 543 395	52
163 543 396	52
163 543 397	52
163 543 401	46
163 543 402	46
163 543 403	46
163 543 404	46
163 543 405	46
163 543 406	46
163 543 407	46
163 543 411	46
163 543 412	46
163 543 413	46
163 543 414	46
163 543 415	46
163 543 416	46
163 543 417	46
163 543 421	56
163 543 422	56
163 543 423	56
163 543 424	56
163 543 425	56
163 543 426	56
163 543 427	56
163 543 431	56
163 543 432	56
163 543 433	56
163 543 434	56
163 543 435	56
163 543 436	56
163 543 437	56
163 543 441	50
163 543 442	50
163 543 443	50
163 543 444	50
163 543 445	50
163 543 446	50
163 543 447	50
163 543 451	50
163 543 452	50
163 543 453	50
163 543 454	50
163 543 455	50
163 543 456	50
163 543 457	50
163 546 061	38
163 546 062	38
163 546 063	38
163 546 064	38
163 546 065	38
163 546 066	38
163 546 067	38
163 546 068	38
163 546 069	38
163 546 070	38
163 546 071	38
163 546 072	38

Code	Page
163 546 073	38
163 546 074	38
163 546 075	38
163 546 076	38
163 546 077	38
163 546 078	38
163 546 079	38
163 546 080	38
163 546 081	39
163 546 082	39
163 546 083	39
163 546 084	39
163 546 085	39
163 546 086	39
163 546 087	39
163 546 088	39
163 546 089	39
163 546 090	39
163 546 091	39
163 546 092	39
163 546 093	39
163 546 094	39
163 546 095	39
163 546 096	39
163 546 097	39
163 546 098	39
163 546 099	39
163 546 100	39
163 546 108	41
163 546 109	41
163 546 110	41
163 546 118	41
163 546 119	41
163 546 120	41
163 546 168	44
163 546 169	44
163 546 170	44
163 546 178	44
163 546 179	44
163 546 180	44
163 546 341	43
163 546 342	43
163 546 343	43
163 546 344	43
163 546 345	43
163 546 346	43
163 546 347	43
163 546 348	43
163 546 349	43
163 546 350	43
163 546 351	43
163 546 352	43
163 546 353	43
163 546 354	43
163 546 355	43
163 546 356	43
163 546 357	43
163 546 358	43
163 546 359	43
163 546 360	43
163 546 381	40
163 546 382	40
163 546 383	40
163 546 384	40
163 546 385	40
163 546 386	40
163 546 387	40
163 546 388	40

Code	Page
163 546 389	40
163 546 390	40
163 546 391	40
163 546 392	40
163 546 393	40
163 546 394	40
163 546 395	40
163 546 396	40
163 546 397	40
163 546 398	40
163 546 399	40
163 546 400	40
163 546 401	42
163 546 402	42
163 546 403	42
163 546 404	42
163 546 405	42
163 546 406	42
163 546 407	42
163 546 408	42
163 546 409	42
163 546 410	42
163 546 411	42
163 546 412	42
163 546 413	42
163 546 414	42
163 546 415	42
163 546 416	42
163 546 417	42
163 546 418	42
163 546 419	42
163 546 420	42
163 561 001	67
163 561 002	67
163 561 003	67
163 561 004	67
163 561 005	67
163 561 006	67
163 561 007	67
163 561 008	67
163 561 009	67
163 561 010	67
163 561 011	67
163 561 012	67
163 561 013	67
163 561 014	67
163 561 015	67
163 561 016	67
163 561 017	67
163 561 018	67
163 561 019	67
163 561 020	67
163 561 021	68
163 561 022	68
163 561 023	68
163 561 024	68
163 561 025	68
163 561 026	68
163 561 027	68
163 561 028	68
163 561 029	68
163 561 030	68
163 561 031	68
163 561 032	68
163 561 033	68
163 561 034	68
163 561 035	68
163 561 036	68

Index

Code	Page
163 561 037	68
163 561 038	68
163 561 039	68
163 561 040	68
163 562 001	69
163 562 002	69
163 562 003	69
163 562 004	69
163 562 005	69
163 562 006	69
163 562 007	69
163 562 008	69
163 562 009	69
163 562 010	69
163 562 011	69
163 562 012	69
163 562 013	69
163 562 014	69
163 562 015	69
163 562 016	69
163 562 017	69
163 562 018	69
163 562 019	69
163 562 020	69
163 562 021	70
163 562 022	70
163 562 023	70
163 562 024	70
163 562 025	70
163 562 026	70
163 562 027	70
163 562 028	70
163 562 029	70
163 562 030	70
163 562 031	70
163 562 032	70
163 562 033	70
163 562 034	70
163 562 035	70
163 562 036	70
163 562 037	70
163 562 038	70
163 562 039	70
163 562 040	70
163 567 002	62
163 567 003	62
163 567 004	62
163 567 005	62
163 567 006	62
163 567 007	62
163 567 008	62
163 567 022	62
163 567 023	62
163 567 024	62
163 567 025	62
163 567 026	62
163 567 027	62
163 567 028	62
163 567 042	63
163 567 043	63
163 567 044	63
163 567 045	63
163 567 046	63
163 567 047	63
163 567 048	63
163 567 062	63
163 567 063	63
163 567 064	63

Code	Page
163 567 065	63
163 567 066	63
163 567 067	63
163 567 068	63
163 567 202	62
163 567 203	62
163 567 204	62
163 567 205	62
163 567 206	62
163 567 207	62
163 567 208	62
163 567 242	63
163 567 243	63
163 567 244	63
163 567 245	63
163 567 246	63
163 567 247	63
163 567 248	63
163 567 802	61
163 567 803	61
163 567 804	61
163 567 805	61
163 567 806	61
163 567 807	61
163 567 808	61
163 567 822	61
163 567 823	61
163 567 824	61
163 567 825	61
163 567 826	61
163 567 827	61
163 567 828	61
163 567 832	61
163 567 833	61
163 567 834	61
163 567 835	61
163 567 836	61
163 567 837	61
163 567 838	61
163 568 002	65
163 568 003	65
163 568 004	65
163 568 005	65
163 568 006	65
163 568 007	65
163 568 008	65
163 568 022	65
163 568 023	65
163 568 024	65
163 568 025	65
163 568 026	65
163 568 027	65
163 568 028	65
163 568 042	66
163 568 043	66
163 568 044	66
163 568 045	66
163 568 046	66
163 568 047	66
163 568 048	66
163 568 062	66
163 568 063	66
163 568 064	66
163 568 065	66
163 568 066	66
163 568 067	66
163 568 068	66
163 568 202	65

Code	Page
163 568 203	65
163 568 204	65
163 568 205	65
163 568 206	65
163 568 207	65
163 568 208	65
163 568 242	66
163 568 243	66
163 568 244	66
163 568 245	66
163 568 246	66
163 568 247	66
163 568 248	66
163 568 802	64
163 568 803	64
163 568 804	64
163 568 805	64
163 568 806	64
163 568 807	64
163 568 808	64
163 568 822	64
163 568 823	64
163 568 824	64
163 568 825	64
163 568 826	64
163 568 827	64
163 568 828	64
163 568 832	64
163 568 833	64
163 568 834	64
163 568 835	64
163 568 836	64
163 568 837	64
163 568 838	64
163 582 001	72
163 582 002	72
163 582 003	72
163 582 004	72
163 582 005	72
163 582 006	72
163 582 007	72
163 582 011	72
163 582 012	72
163 582 013	72
163 582 014	72
163 582 015	72
163 582 016	72
163 582 017	72
163 582 021	73
163 582 022	73
163 582 023	73
163 582 024	73
163 582 025	73
163 582 026	73
163 582 027	73
163 582 031	73
163 582 032	73
163 582 033	73
163 582 034	73
163 582 035	73
163 582 036	73
163 582 037	73
163 582 102	74
163 582 103	74
163 582 104	74
163 582 105	74
163 582 106	74
163 582 107	74

Index

Code	Page
163 582 112	74
163 582 113	74
163 582 114	74
163 582 115	74
163 582 116	74
163 582 117	74
163 582 122	75
163 582 123	75
163 582 124	75
163 582 125	75
163 582 126	75
163 582 127	75
163 582 132	75
163 582 133	75
163 582 134	75
163 582 135	75
163 582 136	75
163 582 137	75
163 586 001	76
163 586 002	76
163 586 003	76
163 586 004	76
163 586 005	76
163 586 006	76
163 586 007	76
163 586 011	76
163 586 012	76
163 586 013	76
163 586 014	76
163 586 015	76
163 586 016	76
163 586 017	76
163 586 102	76
163 586 103	76
163 586 104	76
163 586 105	76
163 586 106	76
163 586 107	76
163 586 112	76
163 586 113	76
163 586 114	76
163 586 115	76
163 586 116	76
163 586 117	76
163 591 001	71
163 591 002	71
163 591 003	71
163 591 004	71
163 591 005	71
163 591 006	71
163 591 007	71
163 591 008	71
163 591 009	71
163 591 010	71
163 591 011	71
163 591 012	71
163 591 013	71
163 591 014	71
163 591 015	71
163 591 016	71
163 591 017	71
163 591 018	71
163 591 019	71
163 591 020	71
163 595 001	71
163 595 002	71
163 595 003	71
163 595 004	71

Code	Page
163 595 005	71
163 595 006	71
163 595 007	71
163 595 008	71
163 595 009	71
163 595 010	71
163 595 011	71
163 595 012	71
163 595 013	71
163 595 014	71
163 595 015	71
163 595 016	71
163 595 017	71
163 595 018	71
163 595 019	71
163 595 020	71
163 614 012	135
163 614 013	135
163 614 014	135
163 614 015	135
163 614 016	135
163 614 017	135
163 615 012	136
163 615 013	136
163 615 014	136
163 615 015	136
163 615 016	136
163 615 017	136
163 617 112	137
163 617 113	137
163 617 114	137
163 617 115	137
163 617 116	137
163 617 117	137
163 624 012	138
163 624 013	138
163 624 014	138
163 624 015	138
163 624 016	138
163 624 017	138
163 624 032	138
163 624 033	138
163 624 034	138
163 624 035	138
163 624 036	138
163 624 037	138
163 625 012	139
163 625 013	139
163 625 014	139
163 625 015	139
163 625 016	139
163 625 017	139
163 625 032	139
163 625 033	139
163 625 034	139
163 625 035	139
163 625 036	139
163 625 037	139
163 627 112	140
163 627 113	140
163 627 114	140
163 627 115	140
163 627 116	140
163 627 117	140
163 627 132	140
163 627 133	140
163 627 134	140
163 627 135	140

Code	Page
163 627 136	140
163 627 137	140
163 644 012	141
163 644 013	141
163 644 014	141
163 644 015	141
163 644 016	141
163 644 017	141
163 644 032	141
163 644 033	141
163 644 034	141
163 644 035	141
163 644 036	141
163 644 037	141
163 645 012	142
163 645 013	142
163 645 014	142
163 645 015	142
163 645 016	142
163 645 017	142
163 645 032	142
163 645 033	142
163 645 034	142
163 645 035	142
163 645 036	142
163 645 037	142
163 647 112	143
163 647 113	143
163 647 114	143
163 647 115	143
163 647 116	143
163 647 117	143
163 647 132	143
163 647 133	143
163 647 134	143
163 647 135	143
163 647 136	143
163 647 137	143
163 654 012	144
163 654 013	144
163 654 014	144
163 654 015	144
163 654 016	144
163 654 017	144
163 654 032	144
163 654 033	144
163 654 034	144
163 654 035	144
163 654 036	144
163 654 037	144
163 655 012	145
163 655 013	145
163 655 014	145
163 655 015	145
163 655 016	145
163 655 017	145
163 655 032	145
163 655 033	145
163 655 034	145
163 655 035	145
163 655 036	145
163 655 037	145
163 657 112	146
163 657 113	146
163 657 114	146
163 657 115	146
163 657 116	146
163 657 117	146

Index

Code	Page
163 657 132	146
163 657 133	146
163 657 134	146
163 657 135	146
163 657 136	146
163 657 137	146
163 684 012	147
163 684 013	147
163 684 014	147
163 684 015	147
163 684 016	147
163 684 017	147
163 684 032	147
163 684 033	147
163 684 034	147
163 684 035	147
163 684 036	147
163 684 037	147
163 685 012	148
163 685 013	148
163 685 014	148
163 685 015	148
163 685 016	148
163 685 017	148
163 685 032	148
163 685 033	148
163 685 034	148
163 685 035	148
163 685 036	148
163 685 037	148
163 687 112	149
163 687 113	149
163 687 114	149
163 687 115	149
163 687 116	149
163 687 117	149
163 687 132	149
163 687 133	149
163 687 134	149
163 687 135	149
163 687 136	149
163 687 137	149
167 060 019	31
167 060 020	31
167 060 021	31
167 060 022	31
167 060 023	31
167 060 024	31
167 060 025	31
167 060 038	31
167 060 039	31
167 060 040	31
167 060 041	31
167 060 042	31
167 060 043	31
167 061 003	29
167 061 004	29
167 061 012	29
167 061 013	29
167 061 014	29
167 061 015	29
167 061 016	29
167 061 017	29
167 061 035	29, 32
167 061 036	29, 32
167 061 037	29, 32
167 061 038	29, 32
167 061 039	29, 32

Code	Page
167 061 040	29, 32
167 061 041	29, 32
167 061 153	29
167 061 155	29
167 061 156	29
167 061 157	29
167 061 158	29
167 061 159	29
167 061 160	29
167 061 161	29
167 061 162	29
167 061 163	29
167 061 164	29
167 061 165	29
167 061 166	29
167 061 167	29
173 061 003	30
173 061 004	30
173 061 005	30
173 061 006	30
173 061 007	30
173 061 008	30
173 061 009	30
173 061 010	30
173 061 011	30
173 061 012	30
173 061 013	30
173 061 014	30
173 061 015	30
173 061 016	30
173 061 017	30
173 061 153	31
173 061 155	31
173 061 156	31
173 061 157	31
173 061 158	31
173 061 159	31
173 061 160	31
173 061 161	31
173 061 162	31
173 061 163	31
173 061 164	31
173 061 165	31
173 061 166	31
173 061 167	31
199 025 697	150
199 025 698	150
199 025 699	150
199 025 707	151
199 025 708	151
199 025 709	151
199 025 717	152
199 025 718	152
199 025 719	152
199 025 727	150
199 025 728	150
199 025 729	150
199 025 737	151
199 025 738	151
199 025 739	151
199 025 747	152
199 025 748	152
199 025 749	152
199 104 102	102
199 104 103	102
199 104 104	102
199 104 105	102
199 104 106	102

Code	Page
199 104 107	102
199 104 108	102
199 104 112	102
199 104 113	102
199 104 114	102
199 104 115	102
199 104 116	102
199 104 117	102
199 104 118	102
199 104 142	102
199 104 143	102
199 104 144	102
199 104 145	102
199 104 146	102
199 104 147	102
199 104 148	102
199 104 152	102
199 104 153	102
199 104 154	102
199 104 155	102
199 104 156	102
199 104 157	102
199 104 158	102
199 107 102	80
199 107 103	80
199 107 104	80
199 107 105	80
199 107 106	80
199 107 107	80
199 107 108	80
199 107 112	80
199 107 113	80
199 107 114	80
199 107 115	80
199 107 116	80
199 107 117	80
199 107 118	80
199 107 122	81
199 107 123	81
199 107 124	81
199 107 125	81
199 107 126	81
199 107 127	81
199 107 128	81
199 107 132	81
199 107 133	81
199 107 134	81
199 107 135	81
199 107 136	81
199 107 137	81
199 107 138	81
199 107 142	83
199 107 143	83
199 107 144	83
199 107 145	83
199 107 146	83
199 107 147	83
199 107 148	83
199 107 152	83
199 107 153	83
199 107 154	83
199 107 155	83
199 107 156	83
199 107 157	83
199 107 158	83
199 107 162	84
199 107 163	84
199 107 164	84

Index

Code	Page
199 107 165	84
199 107 166	84
199 107 167	84
199 107 168	84
199 107 172	84
199 107 173	84
199 107 174	84
199 107 175	84
199 107 176	84
199 107 177	84
199 107 178	84
199 107 702	82
199 107 703	82
199 107 704	82
199 107 705	82
199 107 706	82
199 107 707	82
199 107 708	82
199 107 712	82
199 107 713	82
199 107 714	82
199 107 715	82
199 107 716	82
199 107 717	82
199 107 718	82
199 107 742	85
199 107 743	85
199 107 744	85
199 107 745	85
199 107 746	85
199 107 747	85
199 107 748	85
199 107 752	85
199 107 753	85
199 107 754	85
199 107 755	85
199 107 756	85
199 107 757	85
199 107 758	85
199 130 182	88
199 130 183	88
199 130 184	88
199 130 185	88
199 130 186	88
199 130 187	88
199 130 188	88
199 130 189	88
199 130 190	88
199 130 191	88
199 130 192	88
199 130 193	88
199 130 194	88
199 130 195	88
199 130 196	88
199 130 197	88
199 130 198	88
199 130 199	88
199 130 200	88
199 130 201	88
199 130 202	92
199 130 203	92
199 130 204	92
199 130 205	92
199 130 206	92
199 130 207	92
199 130 208	92
199 130 209	92
199 130 210	92

Code	Page
199 130 211	92
199 130 212	92
199 130 213	92
199 130 214	92
199 130 215	92
199 130 216	92
199 130 217	92
199 130 218	92
199 130 219	92
199 130 220	92
199 130 221	92
199 130 402	86
199 130 403	86
199 130 404	86
199 130 405	86
199 130 406	86
199 130 407	86
199 130 408	86
199 130 409	86
199 130 410	86
199 130 411	86
199 130 412	86
199 130 413	86
199 130 414	86
199 130 415	86
199 130 416	86
199 130 417	86
199 130 418	86
199 130 419	86
199 130 420	86
199 130 421	86
199 130 422	87
199 130 423	87
199 130 424	87
199 130 425	87
199 130 426	87
199 130 427	87
199 130 428	87
199 130 429	87
199 130 430	87
199 130 431	87
199 130 432	87
199 130 433	87
199 130 434	87
199 130 435	87
199 130 436	87
199 130 437	87
199 130 438	87
199 130 439	87
199 130 440	87
199 130 441	87
199 130 442	90
199 130 443	90
199 130 444	90
199 130 445	90
199 130 446	90
199 130 447	90
199 130 448	90
199 130 449	90
199 130 450	90
199 130 451	90
199 130 452	90
199 130 453	90
199 130 454	90
199 130 455	90
199 130 456	90
199 130 457	90
199 130 458	90

Code	Page
199 130 459	90
199 130 460	90
199 130 461	90
199 130 462	91
199 130 463	91
199 130 464	91
199 130 465	91
199 130 466	91
199 130 467	91
199 130 468	91
199 130 469	91
199 130 470	91
199 130 471	91
199 130 472	91
199 130 473	91
199 130 474	91
199 130 475	91
199 130 476	91
199 130 477	91
199 130 478	91
199 130 479	91
199 130 480	91
199 130 481	91
199 134 489	89
199 134 490	89
199 134 491	89
199 134 499	89
199 134 500	89
199 134 501	89
199 134 509	93
199 134 510	93
199 134 511	93
199 134 519	93
199 134 520	93
199 134 521	93
199 140 162	154
199 140 163	154
199 140 164	154
199 140 165	154
199 140 166	154
199 140 167	154
199 140 168	154
199 140 182	154
199 140 183	154
199 140 184	154
199 140 185	154
199 140 186	154
199 140 187	154
199 140 188	154
199 140 202	153
199 140 203	153
199 140 204	153
199 140 205	153
199 140 206	153
199 140 207	153
199 140 208	153
199 140 222	153
199 140 223	153
199 140 224	153
199 140 225	153
199 140 226	153
199 140 227	153
199 140 228	153
199 140 242	156
199 140 243	156
199 140 244	156
199 140 245	156
199 140 246	156

Index

Code	Page
199 140 247	156
199 140 248	156
199 140 262	156
199 140 263	156
199 140 264	156
199 140 265	156
199 140 266	156
199 140 267	156
199 140 268	156
199 140 282	155
199 140 283	155
199 140 284	155
199 140 285	155
199 140 286	155
199 140 287	155
199 140 288	155
199 140 302	155
199 140 303	155
199 140 304	155
199 140 305	155
199 140 306	155
199 140 307	155
199 140 308	155
199 140 722	153
199 140 723	153
199 140 724	153
199 140 725	153
199 140 726	153
199 140 727	153
199 140 728	153
199 140 742	155
199 140 743	155
199 140 744	155
199 140 745	155
199 140 746	155
199 140 747	155
199 140 748	155
199 140 762	154
199 140 763	154
199 140 764	154
199 140 765	154
199 140 766	154
199 140 767	154
199 140 768	154
199 140 782	156
199 140 783	156
199 140 784	156
199 140 785	156
199 140 786	156
199 140 787	156
199 140 788	156
199 141 162	158
199 141 163	158
199 141 164	158
199 141 165	158
199 141 166	158
199 141 167	158
199 141 168	158
199 141 182	158
199 141 183	158
199 141 184	158
199 141 185	158
199 141 186	158
199 141 187	158
199 141 188	158
199 141 202	157
199 141 203	157
199 141 204	157

Code	Page
199 141 205	157
199 141 206	157
199 141 207	157
199 141 208	157
199 141 222	157
199 141 223	157
199 141 224	157
199 141 225	157
199 141 226	157
199 141 227	157
199 141 228	157
199 141 242	160
199 141 243	160
199 141 244	160
199 141 245	160
199 141 246	160
199 141 247	160
199 141 248	160
199 141 262	160
199 141 263	160
199 141 264	160
199 141 265	160
199 141 266	160
199 141 267	160
199 141 268	160
199 141 282	159
199 141 283	159
199 141 284	159
199 141 285	159
199 141 286	159
199 141 287	159
199 141 288	159
199 141 302	159
199 141 303	159
199 141 304	159
199 141 305	159
199 141 306	159
199 141 307	159
199 141 308	159
199 141 722	157
199 141 723	157
199 141 724	157
199 141 725	157
199 141 726	157
199 141 727	157
199 141 728	157
199 141 742	159
199 141 743	159
199 141 744	159
199 141 745	159
199 141 746	159
199 141 747	159
199 141 748	159
199 141 762	158
199 141 763	158
199 141 764	158
199 141 765	158
199 141 766	158
199 141 767	158
199 141 768	158
199 141 782	160
199 141 783	160
199 141 784	160
199 141 785	160
199 141 786	160
199 141 787	160
199 141 788	160
199 185 082	99

Code	Page
199 185 083	99
199 185 084	99
199 185 085	99
199 185 086	99
199 185 087	99
199 185 088	99
199 185 092	99
199 185 093	99
199 185 094	99
199 185 095	99
199 185 096	99
199 185 097	99
199 185 098	99
199 185 102	98
199 185 103	98
199 185 104	98
199 185 105	98
199 185 106	98
199 185 107	98
199 185 108	98
199 185 112	98
199 185 113	98
199 185 114	98
199 185 115	98
199 185 116	98
199 185 117	98
199 185 118	98
199 185 122	95
199 185 123	95
199 185 124	95
199 185 125	95
199 185 126	95
199 185 127	95
199 185 128	95
199 185 132	95
199 185 133	95
199 185 134	95
199 185 135	95
199 185 136	95
199 185 137	95
199 185 138	95
199 185 142	94
199 185 143	94
199 185 144	94
199 185 145	94
199 185 146	94
199 185 147	94
199 185 148	94
199 185 152	94
199 185 153	94
199 185 154	94
199 185 155	94
199 185 156	94
199 185 157	94
199 185 158	94
199 185 262	100
199 185 263	100
199 185 264	100
199 185 265	100
199 185 266	100
199 185 267	100
199 185 268	100
199 185 272	100
199 185 273	100
199 185 274	100
199 185 275	100
199 185 276	100
199 185 277	100

Index

Code	Page
199 185 278	100
199 185 282	101
199 185 283	101
199 185 284	101
199 185 285	101
199 185 286	101
199 185 287	101
199 185 288	101
199 185 292	101
199 185 293	101
199 185 294	101
199 185 295	101
199 185 296	101
199 185 297	101
199 185 298	101
199 185 302	97
199 185 303	97
199 185 304	97
199 185 305	97
199 185 306	97
199 185 307	97
199 185 308	97
199 185 312	97
199 185 313	97
199 185 314	97
199 185 315	97
199 185 316	97
199 185 317	97
199 185 318	97
199 185 322	96
199 185 323	96
199 185 324	96
199 185 325	96
199 185 326	96
199 185 327	96
199 185 328	96
199 185 332	96
199 185 333	96
199 185 334	96
199 185 335	96
199 185 336	96
199 185 337	96
199 185 338	96
199 230 402	107
199 230 403	107
199 230 404	107
199 230 405	107
199 230 406	107
199 230 407	107
199 230 408	107
199 230 412	107
199 230 413	107
199 230 414	107
199 230 415	107
199 230 416	107
199 230 417	107
199 230 418	107
199 230 422	109
199 230 423	109
199 230 424	109
199 230 425	109
199 230 426	109
199 230 427	109
199 230 428	109
199 230 432	109
199 230 433	109
199 230 434	109
199 230 435	109

Code	Page
199 230 436	109
199 230 437	109
199 230 438	109
199 230 442	114
199 230 443	114
199 230 444	114
199 230 445	114
199 230 446	114
199 230 447	114
199 230 448	114
199 230 452	114
199 230 453	114
199 230 454	114
199 230 455	114
199 230 456	114
199 230 457	114
199 230 458	114
199 230 462	116
199 230 463	116
199 230 464	116
199 230 465	116
199 230 466	116
199 230 467	116
199 230 468	116
199 230 472	116
199 230 473	116
199 230 474	116
199 230 475	116
199 230 476	116
199 230 477	116
199 230 478	116
199 230 482	121
199 230 483	121
199 230 484	121
199 230 485	121
199 230 486	121
199 230 487	121
199 230 488	121
199 230 492	121
199 230 493	121
199 230 494	121
199 230 495	121
199 230 496	121
199 230 497	121
199 230 498	121
199 230 502	123
199 230 503	123
199 230 504	123
199 230 505	123
199 230 506	123
199 230 507	123
199 230 508	123
199 230 512	123
199 230 513	123
199 230 514	123
199 230 515	123
199 230 516	123
199 230 517	123
199 230 518	123
199 230 522	106
199 230 523	106
199 230 524	106
199 230 525	106
199 230 526	106
199 230 527	106
199 230 528	106
199 230 529	106
199 230 530	106

Code	Page
199 230 531	106
199 230 532	106
199 230 533	106
199 230 534	106
199 230 535	106
199 230 536	106
199 230 537	106
199 230 538	106
199 230 539	106
199 230 540	106
199 230 541	106
199 230 542	108
199 230 543	108
199 230 544	108
199 230 545	108
199 230 546	108
199 230 547	108
199 230 548	108
199 230 549	108
199 230 550	108
199 230 551	108
199 230 552	108
199 230 553	108
199 230 554	108
199 230 555	108
199 230 556	108
199 230 557	108
199 230 558	108
199 230 559	108
199 230 560	108
199 230 561	108
199 230 562	113
199 230 563	113
199 230 564	113
199 230 565	113
199 230 566	113
199 230 567	113
199 230 568	113
199 230 569	113
199 230 570	113
199 230 571	113
199 230 572	113
199 230 573	113
199 230 574	113
199 230 575	113
199 230 576	113
199 230 577	113
199 230 578	113
199 230 579	113
199 230 580	113
199 230 581	113
199 230 582	115
199 230 583	115
199 230 584	115
199 230 585	115
199 230 586	115
199 230 587	115
199 230 588	115
199 230 589	115
199 230 590	115
199 230 591	115
199 230 592	115
199 230 593	115
199 230 594	115
199 230 595	115
199 230 596	115
199 230 597	115
199 230 598	115

Index

Code	Page
199 230 599	115
199 230 600	115
199 230 601	115
199 230 602	120
199 230 603	120
199 230 604	120
199 230 605	120
199 230 606	120
199 230 607	120
199 230 608	120
199 230 609	120
199 230 610	120
199 230 611	120
199 230 612	120
199 230 613	120
199 230 614	120
199 230 615	120
199 230 616	120
199 230 617	120
199 230 618	120
199 230 619	120
199 230 620	120
199 230 621	120
199 230 622	122
199 230 623	122
199 230 624	122
199 230 625	122
199 230 626	122
199 230 627	122
199 230 628	122
199 230 629	122
199 230 630	122
199 230 631	122
199 230 632	122
199 230 633	122
199 230 634	122
199 230 635	122
199 230 636	122
199 230 637	122
199 230 638	122
199 230 639	122
199 230 640	122
199 230 641	122
199 230 752	111
199 230 753	111
199 230 754	111
199 230 755	111
199 230 756	111
199 230 757	111
199 230 758	111
199 230 772	111
199 230 773	111
199 230 774	111
199 230 775	111
199 230 776	111
199 230 777	111
199 230 778	111
199 230 792	118
199 230 793	118
199 230 794	118
199 230 795	118
199 230 796	118
199 230 797	118
199 230 798	118
199 230 812	118
199 230 813	118
199 230 814	118
199 230 815	118

Code	Page
199 230 816	118
199 230 817	118
199 230 818	118
199 230 832	125
199 230 833	125
199 230 834	125
199 230 835	125
199 230 836	125
199 230 837	125
199 230 838	125
199 230 852	125
199 230 853	125
199 230 854	125
199 230 855	125
199 230 856	125
199 230 857	125
199 230 858	125
199 230 872	110
199 230 873	110
199 230 874	110
199 230 875	110
199 230 876	110
199 230 877	110
199 230 878	110
199 230 879	110
199 230 880	110
199 230 881	110
199 230 892	110
199 230 893	110
199 230 894	110
199 230 895	110
199 230 896	110
199 230 897	110
199 230 898	110
199 230 899	110
199 230 900	110
199 230 901	110
199 230 912	117
199 230 913	117
199 230 914	117
199 230 915	117
199 230 916	117
199 230 917	117
199 230 918	117
199 230 919	117
199 230 920	117
199 230 921	117
199 230 932	117
199 230 933	117
199 230 934	117
199 230 935	117
199 230 936	117
199 230 937	117
199 230 938	117
199 230 939	117
199 230 940	117
199 230 941	117
199 230 942	124
199 230 943	124
199 230 944	124
199 230 945	124
199 230 946	124
199 230 947	124
199 230 948	124
199 230 949	124
199 230 950	124
199 230 951	124
199 230 952	124

Code	Page
199 230 953	124
199 230 954	124
199 230 955	124
199 230 956	124
199 230 957	124
199 230 958	124
199 230 959	124
199 230 960	124
199 230 961	124
199 234 609	112
199 234 610	112
199 234 611	112
199 234 619	112
199 234 620	112
199 234 621	112
199 234 629	119
199 234 630	119
199 234 631	119
199 234 639	119
199 234 640	119
199 234 641	119
199 234 649	126
199 234 650	126
199 234 651	126
199 234 659	126
199 234 660	126
199 234 661	126
199 240 162	161
199 240 163	161
199 240 164	161
199 240 165	161
199 240 166	161
199 240 167	161
199 240 168	161
199 240 182	161
199 240 183	161
199 240 184	161
199 240 185	161
199 240 186	161
199 240 187	161
199 240 188	161
199 240 202	162
199 240 203	162
199 240 204	162
199 240 205	162
199 240 206	162
199 240 207	162
199 240 208	162
199 240 222	162
199 240 223	162
199 240 224	162
199 240 225	162
199 240 226	162
199 240 227	162
199 240 228	162
199 240 242	163
199 240 243	163
199 240 244	163
199 240 245	163
199 240 246	163
199 240 247	163
199 240 248	163
199 240 262	163
199 240 263	163
199 240 264	163
199 240 265	163
199 240 266	163
199 240 267	163

Index

Code	Page
199 240 268	163
199 240 642	161
199 240 643	161
199 240 644	161
199 240 645	161
199 240 646	161
199 240 647	161
199 240 648	161
199 240 662	162
199 240 663	162
199 240 664	162
199 240 665	162
199 240 666	162
199 240 667	162
199 240 668	162
199 240 682	163
199 240 683	163
199 240 684	163
199 240 685	163
199 240 686	163
199 240 687	163
199 240 688	163
199 241 162	164
199 241 163	164
199 241 164	164
199 241 165	164
199 241 166	164
199 241 167	164
199 241 168	164
199 241 182	164
199 241 183	164
199 241 184	164
199 241 185	164
199 241 186	164
199 241 187	164
199 241 188	164
199 241 202	165
199 241 203	165
199 241 204	165
199 241 205	165
199 241 206	165
199 241 207	165
199 241 208	165
199 241 222	165
199 241 223	165
199 241 224	165
199 241 225	165
199 241 226	165
199 241 227	165
199 241 228	165
199 241 242	166
199 241 243	166
199 241 244	166
199 241 245	166
199 241 246	166
199 241 247	166
199 241 248	166
199 241 262	166
199 241 263	166
199 241 264	166
199 241 265	166
199 241 266	166
199 241 267	166
199 241 268	166
199 241 642	164
199 241 643	164
199 241 644	164
199 241 645	164

Code	Page
199 241 646	164
199 241 647	164
199 241 648	164
199 241 662	165
199 241 663	165
199 241 664	165
199 241 665	165
199 241 666	165
199 241 667	165
199 241 668	165
199 241 682	166
199 241 683	166
199 241 684	166
199 241 685	166
199 241 686	166
199 241 687	166
199 241 688	166
199 285 082	132
199 285 083	132
199 285 084	132
199 285 085	132
199 285 086	132
199 285 087	132
199 285 088	132
199 285 092	132
199 285 093	132
199 285 094	132
199 285 095	132
199 285 096	132
199 285 097	132
199 285 098	132
199 285 102	131
199 285 103	131
199 285 104	131
199 285 105	131
199 285 106	131
199 285 107	131
199 285 108	131
199 285 112	131
199 285 113	131
199 285 114	131
199 285 115	131
199 285 116	131
199 285 117	131
199 285 118	131
199 285 122	128
199 285 123	128
199 285 124	128
199 285 125	128
199 285 126	128
199 285 127	128
199 285 128	128
199 285 132	128
199 285 133	128
199 285 134	128
199 285 135	128
199 285 136	128
199 285 137	128
199 285 138	128
199 285 142	127
199 285 143	127
199 285 144	127
199 285 145	127
199 285 146	127
199 285 147	127
199 285 148	127
199 285 152	127
199 285 153	127

Code	Page
199 285 154	127
199 285 155	127
199 285 156	127
199 285 157	127
199 285 158	127
199 285 262	134
199 285 263	134
199 285 264	134
199 285 265	134
199 285 266	134
199 285 267	134
199 285 268	134
199 285 272	134
199 285 273	134
199 285 274	134
199 285 275	134
199 285 276	134
199 285 277	134
199 285 278	134
199 285 282	133
199 285 283	133
199 285 284	133
199 285 285	133
199 285 286	133
199 285 287	133
199 285 288	133
199 285 292	133
199 285 293	133
199 285 294	133
199 285 295	133
199 285 296	133
199 285 297	133
199 285 298	133
199 285 302	130
199 285 303	130
199 285 304	130
199 285 305	130
199 285 306	130
199 285 307	130
199 285 308	130
199 285 312	130
199 285 313	130
199 285 314	130
199 285 315	130
199 285 316	130
199 285 317	130
199 285 318	130
199 285 322	129
199 285 323	129
199 285 324	129
199 285 325	129
199 285 326	129
199 285 327	129
199 285 328	129
199 285 332	129
199 285 333	129
199 285 334	129
199 285 335	129
199 285 336	129
199 285 337	129
199 285 338	129
720 600 236	22
720 600 237	22
720 600 238	22
720 600 239	22
720 600 240	22
720 600 241	22
720 600 242	22

Index

Code	Page
720 600 243	22
720 600 246	21
720 600 247	21
720 600 248	21
720 600 249	21
720 600 250	21
720 600 251	21
720 600 252	21
720 600 253	21
720 600 257	21
720 600 258	21
720 600 268	21
723 000 106	7
723 000 107	7
723 000 108	7
723 000 109	7
723 000 110	7
723 000 111	7
723 000 112	7
723 000 113	7
723 000 114	7
723 000 117	7
723 010 120	7
723 100 105	8
723 100 106	8
723 100 107	8
723 100 108	8
723 100 109	8
723 100 110	8
723 100 111	8
723 100 112	8
723 100 113	8
723 100 114	8
723 100 117	8
723 100 206	12
723 100 207	12
723 100 208	12
723 100 209	12
723 100 210	12
723 100 211	12
723 150 105	8
723 150 106	8
723 150 107	8
723 150 108	8
723 150 109	8
723 150 110	8
723 150 111	8
723 150 112	8
723 150 113	8
723 150 114	8
723 150 117	8
723 150 120	8
723 200 009	10
723 200 010	10
723 200 011	10
723 200 105	8
723 200 106	8
723 200 107	8
723 200 108	8
723 200 109	8
723 200 110	8
723 200 111	8
723 200 112	8
723 200 113	8
723 200 114	8
723 200 117	8
723 200 120	8
723 200 134	10

Code	Page
723 200 135	10
723 200 137	10
723 200 138	10
723 200 142	10
723 200 145	10
723 200 147	10
723 200 151	10
723 200 164	10
723 200 170	10
723 200 178	10
723 200 184	10
723 250 106	9
723 250 107	9
723 250 108	9
723 250 109	9
723 250 110	9
723 250 111	9
723 250 112	9
723 250 113	9
723 250 114	9
723 300 108	9
723 300 111	9
723 310 006	13
723 310 007	13
723 310 008	13
723 310 009	13
723 310 010	13
723 310 011	13
723 310 036	13
723 310 037	13
723 310 038	13
723 310 039	13
723 310 040	13
723 310 041	13
723 510 105	14
723 510 106	14
723 510 107	14
723 510 108	14
723 510 109	14
723 510 110	14
723 510 111	14
723 510 112	14
723 510 114	14
723 510 130	14
723 510 131	14
723 510 132	14
723 510 133	14
723 510 134	14
723 510 135	14
723 510 136	14
723 510 137	14
723 510 139	14
723 510 155	14
723 510 156	14
723 510 157	14
723 510 158	14
723 510 159	14
723 510 160	14
723 510 161	14
723 510 162	14
723 510 163	14
723 510 164	14
723 510 180	14
723 510 181	14
723 510 182	14
723 510 183	14
723 510 184	14
723 510 185	14

Code	Page
723 510 186	14
723 510 187	14
723 510 188	14
723 510 189	14
723 510 205	15
723 510 206	15
723 510 207	15
723 510 208	15
723 510 209	15
723 510 210	15
723 510 211	15
723 510 230	15
723 510 231	15
723 510 232	15
723 510 233	15
723 510 234	15
723 510 235	15
723 510 236	15
723 510 313	14
723 510 338	14
723 514 105	15
723 514 106	15
723 514 107	15
723 514 108	15
723 514 109	15
723 514 110	15
723 514 111	15
723 514 130	15
723 514 131	15
723 514 132	15
723 514 133	15
723 514 134	15
723 514 135	15
723 514 136	15
723 530 306	17
723 530 307	17
723 530 308	17
723 530 309	17
723 530 310	17
723 530 311	17
723 530 806	18
723 530 807	18
723 530 808	18
723 530 809	18
723 530 810	18
723 530 811	18
723 540 205	16
723 540 206	16
723 540 207	16
723 540 208	16
723 540 209	16
723 540 210	16
723 540 211	16
723 540 230	16
723 540 231	16
723 540 232	16
723 540 233	16
723 540 234	16
723 540 235	16
723 540 236	16
723 540 705	16
723 540 706	16
723 540 707	16
723 540 708	16
723 540 709	16
723 540 710	16
723 540 711	16
723 540 730	16

Index

Code	Page
723 540 731	16
723 540 732	16
723 540 733	16
723 540 734	16
723 540 735	16
723 540 736	16
723 545 505	17
723 545 506	17
723 545 507	17
723 545 508	17
723 545 509	17
723 545 510	17
723 545 511	17
723 545 530	17
723 545 531	17
723 545 532	17
723 545 533	17
723 545 534	17
723 545 535	17
723 545 536	17
723 550 506	18
723 550 507	18
723 550 508	18
723 550 509	18
723 550 510	18
723 550 511	18
723 550 906	18
723 550 907	18
723 550 908	18
723 550 909	18
723 550 910	18
723 550 911	18
723 550 957	18
723 550 958	18
723 550 967	18
723 550 968	18
723 602 005	21
723 602 006	21
723 602 007	21
723 602 008	21
723 602 009	21
723 602 010	21
723 602 011	21
723 602 012	21
723 602 013	21
723 602 014	21
723 690 005	19
723 690 006	19
723 690 007	19
723 690 008	19
723 690 009	19
723 690 010	19
723 690 011	19
723 690 012	19
723 690 013	19
723 690 014	19
723 790 106	23
723 790 107	23
723 790 108	23
723 790 109	23
723 790 110	23
723 790 111	23
723 790 112	23
723 790 113	23
723 790 114	23
723 790 117	23
723 790 119	23
723 790 120	23

Code	Page
723 800 105	20
723 800 106	20
723 800 107	20
723 800 108	20
723 800 109	20
723 800 110	20
723 800 111	20
723 800 162	20
723 800 163	20
723 800 164	20
723 810 117	23
723 810 120	23
723 840 105	20
723 840 106	20
723 840 107	20
723 840 108	20
723 840 109	20
723 840 110	20
723 840 111	20
723 840 112	20
723 840 114	20
723 840 123	20
723 840 605	20
723 840 606	20
723 840 607	20
723 840 608	20
723 840 609	20
723 840 610	20
723 840 611	20
723 900 334	10
723 900 337	10
723 900 341	10
723 900 342	10
723 900 346	10
723 900 347	10
723 900 348	10
723 900 352	10
723 900 353	10
723 900 354	10
723 900 355	10
723 900 358	10
723 900 359	10
723 900 360	10
723 900 364	10
723 900 365	10
723 900 370	10
723 900 371	10
723 900 372	10
723 900 376	10
723 900 378	10
723 900 390	10
723 900 396	10
723 910 105	9
723 910 106	9
723 910 107	9
723 910 108	9
723 910 109	9
723 910 110	9
723 910 111	9
723 910 112	9
723 910 113	9
723 910 114	9
723 910 117	9
723 910 120	9
723 910 206	12
723 910 207	12
723 910 208	12
723 910 209	12

Code	Page
723 910 210	12
723 910 211	12
723 910 342	11
723 910 347	11
723 910 354	11
723 910 360	11
723 910 366	11
723 910 371	11
723 910 434	12
723 910 437	12
723 910 441	12
723 910 446	12
723 910 452	12
723 910 458	12
723 910 505	13
723 910 556	13
723 910 557	13
723 910 558	13
723 910 559	13
723 910 560	13
723 910 561	13
723 960 105	11
723 960 106	11
723 960 107	11
723 960 108	11
723 960 109	11
723 960 110	11
723 960 111	11
723 960 112	11
723 960 113	11
723 960 114	11
723 960 117	11
723 960 405	11
723 960 406	11
723 960 407	11
723 960 408	11
724 600 206	21
724 600 207	21
724 600 208	21
724 600 209	21
724 600 210	21
724 600 211	21
724 600 212	21
724 600 213	21
724 600 655	22
724 600 656	22
724 600 657	22
724 600 658	22
724 600 659	22
724 600 660	22
724 600 661	22
724 600 705	22
724 600 706	22
724 600 707	22
724 600 708	22
724 600 709	22
724 600 710	22
724 600 711	22
724 600 806	21
724 600 807	21
724 600 808	21
724 600 809	21
724 600 810	21
724 600 811	21
724 600 812	21
724 600 813	21
727 700 217	26
727 700 406	24

Index

Code	Page
727 700 407	24
727 700 408	24
727 700 409	24
727 700 410	24
727 700 411	24
727 700 412	24
727 700 413	24
727 700 414	24
727 700 416	24
727 700 417	24, 25
727 700 419	24, 25
727 700 420	24, 25
727 700 421	24
727 701 206	26
727 701 207	26
727 701 208	26
727 701 209	26
727 701 210	26
727 701 211	26
727 701 212	26
727 701 213	26
727 701 214	26
727 701 220	26
727 701 406	25
727 701 407	25
727 701 408	25
727 701 409	25
727 701 410	25
727 701 411	25
727 701 412	25
727 701 413	25
727 701 414	25
748 400 305	27
748 400 306	27
748 400 307	27
748 400 308	27
748 400 309	27
748 400 310	27
748 400 311	27
748 400 312	27
748 400 313	27
748 400 314	27
748 400 315	27
748 400 316	27
748 400 317	27
748 400 319	27
748 400 320	27
748 410 004	19
748 410 005	19
748 410 006	19
748 410 007	19
748 410 008	19
748 410 009	19
748 410 010	19
748 410 011	19
748 410 014	19
748 410 016	19
748 410 019	28
748 410 022	28
748 410 248	19
748 440 705	28
748 440 706	28
748 440 707	28
748 440 708	28
748 440 709	28
748 440 710	28
748 440 711	28
748 440 712	28

Code	Page
748 440 713	28
748 440 714	28
748 440 715	28
748 440 716	28
748 440 717	28
748 440 719	28
748 440 720	28
749 410 004	19
749 410 005	19
749 410 006	19
749 410 007	19
749 410 008	19
749 410 009	19
749 410 010	19
749 410 011	19
749 410 014	19
749 410 016	19
749 410 019	28
749 410 022	28
749 410 248	19
749 440 705	28
749 440 706	28
749 440 707	28
749 440 708	28
749 440 709	28
749 440 710	28
749 440 711	28
749 440 712	28
749 440 713	28
749 440 714	28
749 440 715	28
749 440 716	28
749 440 717	28
749 440 719	28
749 440 720	28
790 109 001	34
790 109 002	34
790 109 003	34
790 109 011	34
790 109 012	34
790 109 013	34
790 109 107	34
790 109 108	34
790 114 028	34
799 298 010	33
799 298 016	33
799 298 027	33
799 298 028	33
799 299 001	33
799 299 002	33
799 299 003	34
799 299 004	34
799 299 005	34
799 350 364	34
799 495 145	34
799 495 146	34

Notes

Notes

Notes

General Condition of Supply of Georg Fischer Piping Systems Limited, Schaffhausen

1 General

1.1 These General Conditions shall apply to all Products supplied by Georg Fischer Piping Systems Limited («Georg Fischer») to the Purchaser.
They shall also apply to all future business even when no express reference is made to them.

1.2 Any deviating or supplementary conditions especially Purchaser's general conditions of purchase and verbal agreements shall only be applicable if accepted in writing by Georg Fischer.

1.3 The written form shall be deemed to be fulfilled by all forms of transmission, evidenced in the form of text, such as telefax, e-mail, etc.

2 Tenders

Tenders shall only be binding if they contain a specifically stated period for acceptance.

3 Scope of Delivery

3.1 Georg Fischer's product range is subject to change.

3.2 The confirmation of order shall govern the scope and execution of the contract.

4 Data and Documents

4.1 Technical documents such as drawings, descriptions, illustrations and data on dimensions, performance and weight as well as the reference to standards are for information purposes only. They are not warranted characteristics and are subject to change.

4.2 All technical documents shall remain the exclusive property of Georg Fischer and may only be used for the agreed purposes or as Georg Fischer may consent.

5 Confidentiality, Protection of Personal Data

5.1 Each party shall keep in strict confidence all commercial or technical information relating to the business of the other party, of which it has gained knowledge in the course of its dealing with the other party. Such information shall neither be disclosed to third parties nor used for other purposes than those for which the information has been supplied.

5.2 In the context of the contractual relation with the Purchaser personal data may be processed. The Purchaser agrees to the disclosure of said data to third parties such as foreign subcontractors and suppliers etc .

6 Local Laws and Regulations, Export Controls

6.1 The Purchaser shall bring to the attention of Georg Fischer all local laws and regulations at the place of destination which bear connection with the execution of the contract and the adherence to relevant safety regulations and approval procedures.

6.2 In case of re-exports, Purchaser shall be responsible for compliance with pertinent export control regulations.

7 Price

7.1 Unless agreed otherwise, the prices shall be deemed quoted net ex works (according to Incoterms 2010 of the ICC, or latest version) including standard packing. All supplementary costs such as the cost of carriage, insurance, export-, transit- and import- licences etc. shall be borne by the Purchaser. The Purchaser shall also bear the costs of all taxes, fees, duties etc. connected with the contract.

7.2 If the costs of packing, carriage, insurance, fees and other supplementary costs are included in the tender price or contract price or are referred to specifically in the tender or confirmation of order, Georg Fischer reserve the right to revise their prices accordingly should any change occur in the relevant tariffs.

8 Terms of Payment

8.1 The Purchaser shall make payment in the manner agreed by the parties without any deductions such as discounts, costs, taxes or dues.

8.2 The Purchaser may only withhold or off-set payments due against counter claims which are either expressly acknowledged by Georg Fischer or finally awarded to the Purchaser.
In particular, payment shall still be made when unessential items are still outstanding provided that the Products already delivered are not rendered unusable as a result.

9 Retention of Title

9.1 The Products shall remain the property of Georg Fischer until the Purchaser shall have settled all claims, present and future, which Georg Fischer may have against him.

9.2 Should the Purchaser resell Products to which title is reserved, in the ordinary course of business, he shall hereby be deemed to have tacitly assigned to Georg Fischer the proceeds deriving from their sale together with all collateral rights, securities and reservations of title until all claims held by Georg Fischer shall have been settled. Until revoked by Georg Fischer, this assignment shall not preclude Purchaser's right to collect the assigned receivables.

9.3 To the extent the value of the Products to which title is reserved together with collateral securities exceeds Georg Fischer's claims against the Purchaser by more than 20%, Georg Fischer shall re-assign the above proceeds to Purchaser at his request.

10 Delivery

10.1 The term of delivery shall commence as soon as the contract has been entered into, all official formalities such as import and payment permits have been obtained and all essential technical issues have been settled. The term of delivery shall be deemed duly observed when, upon its expiry, the Products are ready for despatch.

10.2 Delivery is subject to the following conditions, i.e. the term of delivery shall be reasonably extended:

a) if Georg Fischer are not supplied in time with the information necessary for the execution of the contract or if subsequent changes causing delays are made by the Purchaser.

b) if Georg Fischer are prevented from performing the contract by force majeure. Force majeure shall equally be deemed to be any unforeseeable event beyond Georg Fischer's control which renders Georg Fischer's performance commercially unpractical or impossible, such as delayed or defective supplies from sub contractors labour disputes, governmental orders or regulations, shortages in materials or energy, serious disturbances in Georg Fischer's works, such as the total or partial destruction of plant and equipment or the breakdown of essential facilities, serious disruptions in transport facilities, e.g. impassable roads.
Should the effect of force majeure exceed a period of six (6) months, either party may cancel the contract forthwith.
Georg Fischer shall not be liable for any damage or loss of any kind whatsoever resulting the refrom, any suspension or cancellation being without prejudice to Georg Fischer's right to recover all sums due in respect of consignments delivered and costs incurred to date.

c) if the Purchaser is in delay with the fulfilment of his obligations under the contract, in particular, if he does not adhere to the agreed conditions of payment or if he has failed to timely provide the agreed securities.

10.3 If for reasons attributable to Georg Fischer the agreed term of delivery or a reasonable extension thereof is exceeded, Georg Fischer shall not be deemed in default until the Purchaser has granted to Georg Fischer in writing a reasonable extension thereof of not less than one (1) month which equally is not met.
The Purchaser shall then be entitled to the remedies provided at law, it being however understood that, subject to limitations of Art. 16, damage claims shall be limited to max. 10% of the price of the delayed delivery.

10.4 Part shipments shall be allowed and Georg Fischer shall be entitled to invoice for such partial deliveries.

10.5 If the Purchaser fails to take delivery within a reasonable time of Products notified as ready for despatch, Georg Fischer shall be entitled to store the Products at the Purchaser's expense and risk and to invoice them as delivered. If Purchaser fails to effect payment, Georg Fischer shall be entitled to dispose of the Products.

10.6 Should Purchaser cancel an order without justification and should Georg Fischer not insist on the performance of the contract, Georg Fischer shall be entitled to a penalty amounting to 10% of the contract price, Georg Fischer's right to prove and claim higher damages remaining reserved. Purchaser shall be entitled to prove, that Georg Fischer has suffered no or a considerably lower damage than the penalty forfeited.

11 Packing

If the Products are provided with additional packing over and above the standard packing, such packing shall be charged additionally.

12 Passing of Risk

12.1 The risk in the Products shall pass to the Purchaser as soon as they have left Georg Fischer's works (EX WORKS, Incoterms 2010 ICC, or latest version), even if delivery is made carriage-paid, under similar clauses or including installation or when carriage is organized and managed by Georg Fischer.

12.2 If delivery is delayed for reasons beyond Georg Fischer's control, the risk shall pass to the Purchaser when he is notified that the Products are ready for despatch.

13 Carriage and Insurance

13.1 Unless agreed otherwise, the Purchaser shall bear the cost of carriage.

13.2 The Purchaser shall be responsible for transport insurance against damage of whatever kind. Even when such insurance is arranged by Georg Fischer it shall be deemed taken out by the order of and for the account of the Purchaser and at his risk.

13.3 Special requests regarding carriage and insurance shall be communicated to Georg Fischer in due time. Otherwise carriage shall be arranged by Georg Fischer at their discretion, but without responsibility, by the quickest and cheapest method possible.
In case of carriage-paid delivery transport arrangements shall be made by Georg Fischer. If the Purchaser specifies particular requirements, any extra costs involved shall be borne by him.

13.4 In the event of damage or loss of the Products during carriage the Purchaser shall mark the delivery documents accordingly and immediately have the damage ascertained by the carrier. Not readily ascertainable damages sustained during carriage shall be notified to the carrier within six (6) days after receipt of the Products.

14 Inspection, Notification of Defects and Damages

14.1 The Products will be subject to normal inspection by Georg Fischer during manufacture. Additional tests required by the Purchaser shall be agreed upon in writing and shall be charged to the Purchaser.

14.2 It shall be a condition of Georg Fischer's obligation under the warranties stated hereinafter that Georg Fischer be notified in writing by the Purchaser of any purported defect immediately upon discovery. Notice concerning weight, numbers or apparent defects is to be given latest within 30 days from receipt of the Products, notice of other defects immediately latest within seven (7) working days after discovery, in any event within the agreed warranty period.

14.3 Purchaser shall not dispose of allegedly defective Products until all warranty and/or damage claims are finally settled. At its request, defective Products are to be placed at Georg Fischer's disposal.

14.4 At its request, Georg Fischer shall be given the opportunity to inspect the defect and/or damage, prior to commencement of remedial work, either itself or by third party experts.

15 Warranty

15.1 At the written request of the Purchaser, Georg Fischer undertakes to repair or replace at its discretion, as quickly as possible and free of charge, all Products supplied which demonstrably suffer from faulty design, materials or workmanship, from faulty operating or installation instructions or which become defective or unusable due to faulty advice.
In order to protect employees from toxic or radioactive substances which may have been transported through defective parts returned to Georg Fischer's sales organisation, said parts must be accompanied by a Material Safety Disclosure Form. The form may be obtained from Georg Fischer's local sales company or via www.piping.georgfischer.com.
Replaced parts shall become property of Georg Fischer, unless Georg Fischer waives such claim.

15.2 For Products which are manufactured to specifications, drawings or patterns supplied by the Purchaser, Georg Fischer's warranty shall be restricted to proper materials and workmanship.

15.3 The Purchaser shall be entitled to rescind the contract or to demand a reduction of the contract price if
- the repair or replacement of the defective Product is impossible
- the defective Product is not repaired or replaced within a reasonable period
- Georg Fischer refuses the repair or replacement or if for reasons attributable to Georg Fischer the repair or replacement is delayed.

15.4 For Products or essential components manufactured by a third party and supplied by Georg Fischer under this contract, Georg Fischer's warranty is limited to the warranty provided by said third party.

15.5 This warranty shall not apply to damage resulting from normal wear and tear, improper storage and maintenance, failure to observe the operating instructions, overstressing or overloading, unsuitable operating media, unsuitable construction work or unsuitable building ground, improper repairs or alterations by the Purchaser or third parties, the use of other than original spare parts and other reasons beyond Georg Fischer's control.

15.6 No action or claim may be brought by the Purchaser on account of any alleged breach of warranty or any other obligation of Georg Fischer after the expiration of twelve (12) months from receipt of the Products by the end user or at the latest within eighteen (18) months of the Products being despatched by Georg Fischer.

15.7 In case of Products for use in domestic installations or in utilities
- Georg Fischer will assume the costs of dismantling the defective Product and restoring the damaged object up to CHF 1'000'000 per occurrence.
- warranty or damage claims - contrary to Section 15.6 – are time-barred five (5) years from the date of installation or seven (7) years from the production date, whichever is earlier.

16 Limitation of Liability

The rights and remedies of the customer shall be exclusively governed by these General Conditions of Supply and shall be in lieu of any remedies at law. All further claims for damages, reduction of the purchase price, termination of or rescission of the contract are excluded.
In no case whatsoever shall the customer be entitled to claim damages other than compensation for costs of remedying defects in the supplies. This in particular refers, but shall not be limited, to loss of production, loss of use, loss of orders, loss of profit, third party recovery claims and other direct or indirect or consequential damages.
This limitation of liability equally applies to the extent Georg Fischer is liable for acts or omissions of its employees or third parties engaged for the performance of its obligations. It does not apply in case unlawful intent or gross negligence on the part of Georg Fischer's management and in case of Georg Fischer's statutory liability, in particular under applicable product liability laws.

17 Severability

Should any term or clause of these General Conditions in whole or in part be found to be unenforceable or void, all other provisions shall remain in full force and effect and the unenforceable or void provision shall be replaced by a valid provision, which comes closest to the original intention of the unenforceable or invalid provision.

18 Place of Performance and Jurisdiction

18.1 Place of performance for the Products shall be the Georg Fischer works from which the Products are despatched.

18.2 The contract shall be governed by Swiss law without regard to conflict of law provisions that would require the application of another law.

18.3 Any civil action based upon any alleged breach of this contract shall be filed and prosecuted exclusively in the courts of Schaffhausen, Switzerland.
Georg Fischer however reserves the right to file actions in any court having jurisdiction over controversies arising out of or in connection with the present contract.

03/2011

Worldwide at home

Our sales companies and representatives
ensure local customer support in over 100 countries

www.gfps.com

Argentina / Southern South America
Georg Fischer Central Plastics
Sudamérica S.R.L.
Buenos Aires, Argentina
Phone +54 11 4512 02 90
gfcentral.ps.ar@georgfischer.com
www.gfps.com/ar

Australia
George Fischer Pty Ltd
Riverwood NSW 2210 Australia
Phone +61 (0) 2 9502 8000
australia.ps@georgfischer.com
www.gfps.com/au

Austria
Georg Fischer
Rohrleitungssysteme GmbH
3130 Herzogenburg
Phone +43 (0) 2782 856 43-0
austria.ps@georgfischer.com
www.gfps.com/at

Belgium / Luxembourg
Georg Fischer NV/SA
1070 Bruxelles/Brüssel
Phone +32 (0) 2 556 40 20
be.ps@georgfischer.com
www.gfps.com/be

Brazil
Georg Fischer Sist. de Tub. Ltda.
04795-100 São Paulo
Phone +55 (0) 11 5525 1311
br.ps@georgfischer.com
www.gfps.com/br

Canada
Georg Fischer Piping Systems Ltd
Mississauga, ON L5T 2B2
Phone +1 (905) 670 8005
Fax +1 (905) 670 8513
ca.ps@georgfischer.com
www.gfps.com/ca

China
Georg Fischer Piping Systems Ltd
Shanghai 201319
Phone +86 21 3899 3899
china.ps@georgfischer.com
www.gfps.com/cn

Denmark / Iceland
Georg Fischer A/S
2630 Taastrup
Phone +45 (0) 70 22 19 75
info.dk.ps@georgfischer.com
www.gfps.com/dk

Finland
Georg Fischer AB
01510 VANTAA
Phone +358 (0) 9 586 58 25
Fax +358 (0) 9 586 58 29
info.fi.ps@georgfischer.com
www.gfps.com/fi

France
Georg Fischer SAS
95932 Roissy Charles de Gaulle Cedex
Phone +33 (0) 1 41 84 68 84
fr.ps@georgfischer.com
www.gfps.com/fr

Germany
Georg Fischer GmbH
73095 Albershausen
Phone +49 (0) 7161 302-0
info.de.ps@georgfischer.com
www.gfps.com/de

India
Georg Fischer Piping Systems Ltd
400 076 Mumbai
Phone +91 224007 2001
branchoffice@georgfischer.com
www.gfps.com/in

Indonesia
George Fischer Pte Ltd –
Representative Office
Phone +62 21 2900 8564
Fax +62 21 2900 8566
sgp.ps@georgfischer.com
www.gfps.com/sg

Italy
Georg Fischer S.p.A.
20063 Cernusco S/N (MI)
Phone +39 02 921 861
it.ps@georgfischer.com
www.gfps.com/it

Japan
Georg Fischer Ltd
556-0011 Osaka,
Phone +81 (0) 6 6635 2691
jp.ps@georgfischer.com
www.gfps.com/jp

Korea
GF Piping Systems
Georg Fischer Korea Co., Ltd.
Unit 2501, U-Tower
120 HeungdeokJungang-ro (Yeongdeok-dong)
Giheung-gu, Yongin-si, Gyeonggi-do, Korea
Phone: +82 31 8017 1450
Fax : +82 31 217 1454
kor.ps@georgfischer.com
www.gfps.com/kr

Malaysia
George Fischer (M) Sdn. Bhd.
40460 Shah Alam, Selangor Darul Ehsan
Phone +60 (0) 3 5122 5585
Fax +603 5122 5575
my.ps@georgfischer.com
www.gfps.com/my

Mexico / Northern Latin America
Georg Fischer S.A. de C.V.
Apodaca, Nuevo Leon
CP66636 Mexico
Phone +52 (81) 1340 8586
Fax +52 (81) 1522 8906
mx.ps@georgfischer.com
www.gfps.com/mx

Middle East
Georg Fischer
Piping Systems (Switzerland) Ltd
Dubai, United Arab Emirates
Phone +971 4 289 49 60
gcc.ps@georgfischer.com
www.gfps.com/int

Netherlands
Georg Fischer N.V.
8161 PA Epe
Phone +31 (0) 578 678 222
nl.ps@georgfischer.com
www.gfps.com/nl

Norway
Georg Fischer AS
1351 Rud
Phone +47 67 18 29 00
no.ps@georgfischer.com
www.gfps.com/no

Philippines
George Fischer Pte Ltd
Representative Office
Phone +632 571 2365
Fax +632 571 2368
sgp.ps@georgfischer.com
www.gfps.com/sg

Poland
Georg Fischer Sp. z o.o.
05-090 Sekocin Nowy
Phone +48 (0) 22 31 31 0 50
poland.ps@georgfischer.com
www.gfps.com/pl

Romania
Georg Fischer
Piping Systems (Switzerland) Ltd
020257 Bucharest - Sector 2
Phone +40 (0) 21 230 53 80
ro.ps@georgfischer.com
www.gfps.com/int

Russia
Georg Fischer
Piping Systems (Switzerland) Ltd
Moscow 125047
Phone +7 495 258 60 80
ru.ps@georgfischer.com
www.gfps.com/ru

Singapore
George Fischer Pte Ltd
11 Tampines Street 92, #04-01/07
528 872 Singapore
Phone +65 6747 0611
Fax +65 6747 0577
sgp.ps@georgfischer.com
www.gfps.com/sg

Spain / Portugal
Georg Fischer S.A.
28046 Madrid
Phone +34 (0) 91 781 98 90
es.ps@georgfischer.com
www.gfps.com/es

Sweden
Georg Fischer AB
117 43 Stockholm
Phone +46 (0) 8 506 775 00
info.se.ps@georgfischer.com
www.gfps.com/se

Switzerland
Georg Fischer
Rohrleitungssysteme (Schweiz) AG
8201 Schaffhausen
Phone +41 (0) 52 631 30 26
ch.ps@georgfischer.com
www.gfps.com/ch

Taiwan
Georg Fischer Co., Ltd
San Chung Dist., New Taipei City
Phone +886 2 8512 2822
Fax +886 2 8512 2823
www.gfps.com/tw

United Kingdom / Ireland
George Fischer Sales Limited
Coventry, CV2 2ST
Phone +44 (0) 2476 535 535
uk.ps@georgfischer.com
www.gfps.com/uk

USA / Caribbean
Georg Fischer LLC
9271 Jeronimo Road
92618 Irvine, CA
Phone +1 714 731 88 00
Fax +1 714 731 62 01
us.ps@georgfischer.com
www.gfps.com/us

Vietnam
George Fischer Pte Ltd
Representative Office
136E Tran Vu, Ba Dinh District, Hanoi
Phone +84 4 3715 3290
Fax +84 4 3715 3285
sgp.ps@georgfischer.com
www.gfps.com/sg

International
Georg Fischer
Piping Systems (Switzerland) Ltd
8201 Schaffhausen/Switzerland
Phone +41 (0) 52 631 30 03
Fax +41 (0) 52 631 28 93
info.export@georgfischer.com
www.gfps.com/int

The technical data are not binding. They neither constitute expressly
warranted characteristics nor guaranteed properties nor a guaranteed durability.
They are subject to modification. Our General Terms of Sale apply.

700.671.345
SCINT_8237_4c (08.14)
© Georg Fischer Piping Systems Ltd
CH-8201 Schaffhausen/Switzerland, 2014
Printed in Switzerland